TM Series
SERVICE MANUAL

< Table of Contents >

⚠ Warning

Precautions when installing the scale. To ensure that you get the most from your scale, please follow these instruction.

Do not disassemble the scale.

When any damage or defect occurs, contact your CAS authorized dealer immediately for proper repair.

Do not overload beyond the maximum weight limit.

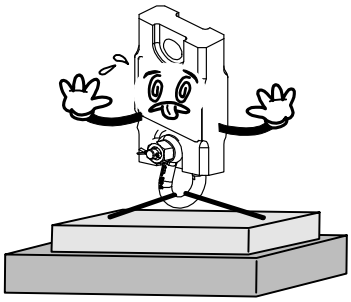

To prevent from fire occurring, Do not place or use the scale near flammable or corrosive gas.

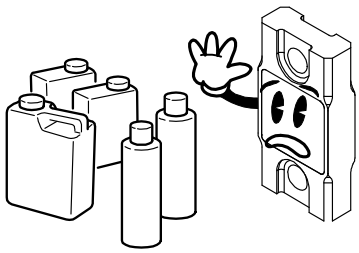

To reduce electric shock or incorrect reading, Do not spill water on the scale or place it in humid condition.

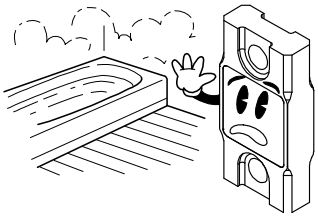

Avoid placing the scale near heater or in direct sunlight.

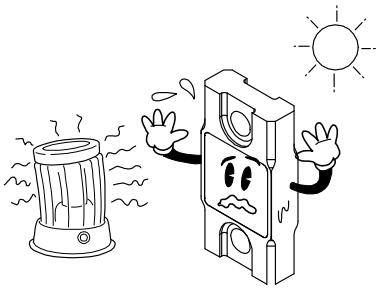

Attention

Make sure to plug your scal into the proper power outlet. For maximum performance, plug into a power outlet 30 minutes before the usage for warm up.

For consistent and accurate reading, maintain periodical check by your CAS authorized dealer.

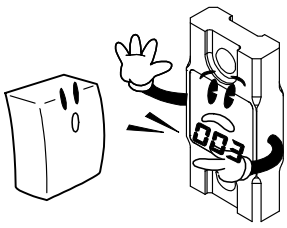

Avoid sudden shock to the scale.

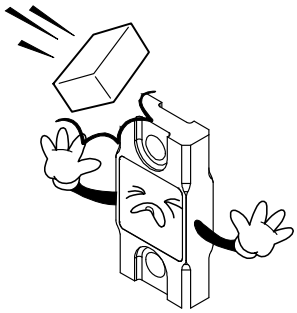

Take the battery out when scale is not in use for long time. Leakage from the batteries is hazardous.

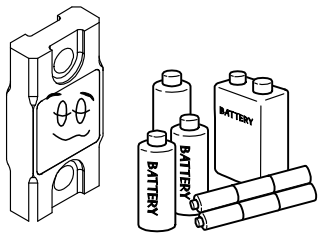

Keep the scale away from other electromagnetic enerating devices.

This may interfere with accurate reading.

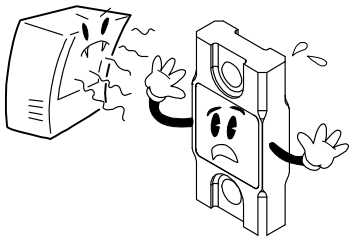

Place the scale on firm and temperature consistent environment.

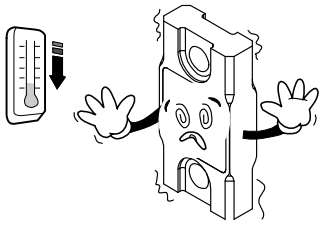

During weighing, do not stand below the product and be careful about any safety accident.
Install a safety pin and be careful so that the shackle may not fall off.

1. PRECAUTIONS

When the product is not used for a long time, please separate the battery from the battery case in the rear face of the balance and store it.

WARNING: The load which hang on the hook should be a vertical load. (Refer to the next features.)

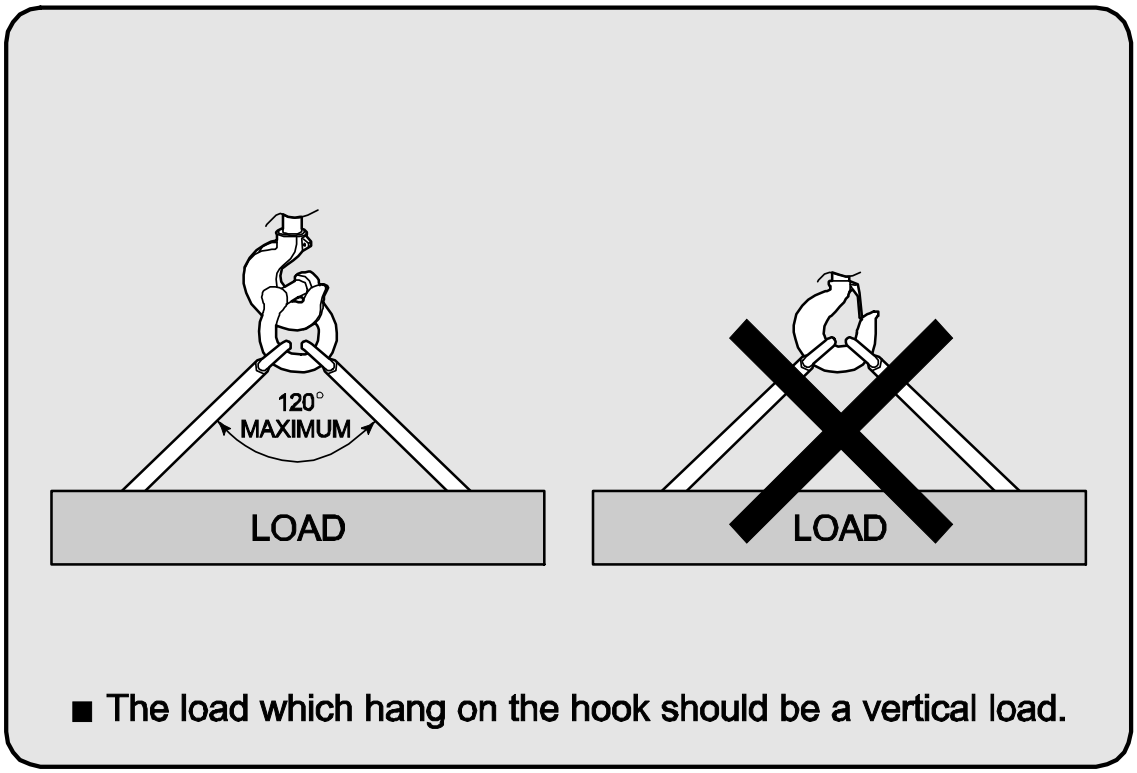

■ The load which hang on the hook should be a vertical load.

2. OVERALL VIEW (TM-Series)

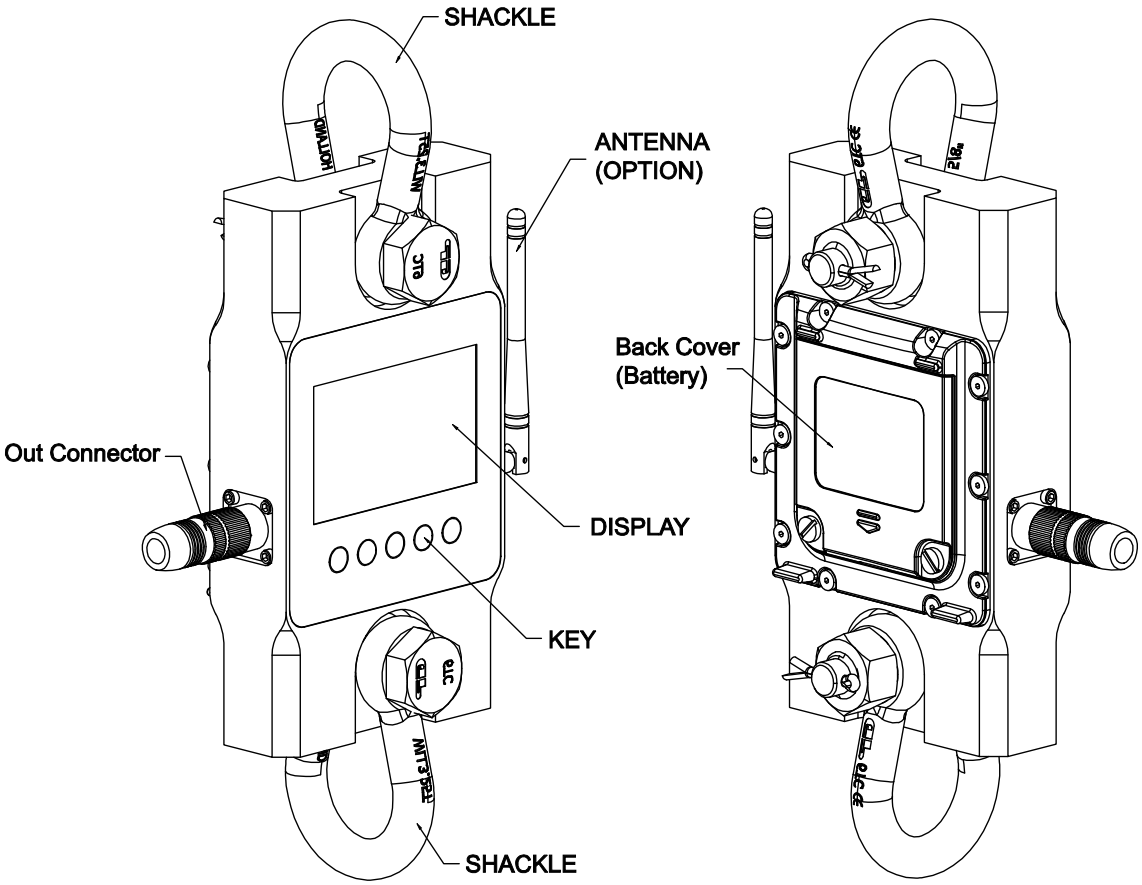

SPECIFICATIONS

MAX. TARE WEIGHT	FULL TARE	
DISPLAY	LCD (5 digit + Sign)	
OPERATION TEMPERATURE	- 20℃ ~ +60℃	
POWER SOURCE	DC 6 V (AA Size Battery 4EA)	
POWER CONSUMPTION	STANDARD	0.03 W
	WIRELESS (Option)	0.36 W
CONTINUOUS USING TIME	STANDARD	400 HOURS (About) (2850mA)
	WIRELESS (Option)	44 HOURS (About) (2850mA)
Communication Distance (Wireless Option)	Bluetooth	Max 50~100 (M)
	X-Bee	Max 200M (OVER) (2.1dB ANTENNA))

3. DISPLAY & KEY FUNCTIONS

■ DISPLAY

DISPLAY	Weight Display or Message. (5 Digit).
ZERO	The current weight is '0'.
NET	The current display of weight is a net weight.
HOLD	The current status is under hold.
S1	The weight is heavier than the lower limit.
S2	The weight is heavier than the upper limit.
↑↓	-
	Displayed when the battery should be changed.
X1000 T lb daN kg	The current weight unit.

■ KEY FUNCTIONS

KEY	DESCRIPTION
⏻	Used to turn the scale ON / OFF.
U	Used to change the weight unit. Used to increase the input value (Set Mode)
▸0◂	Used to reset the scale zero. Used to enter the Set Mode & Increase the (set mode)value.
▸T◂	Used to activate tare function and to clear tare entry.
H	Used to weigh unstable things (livestock, liquid, etc.) Used to store the set value in 'AP/HL' mode

WARNING

WARNING: Do not press the keys with excessive force, the keys are to be pressed with a soft touch.

4. BATTERY USAGE

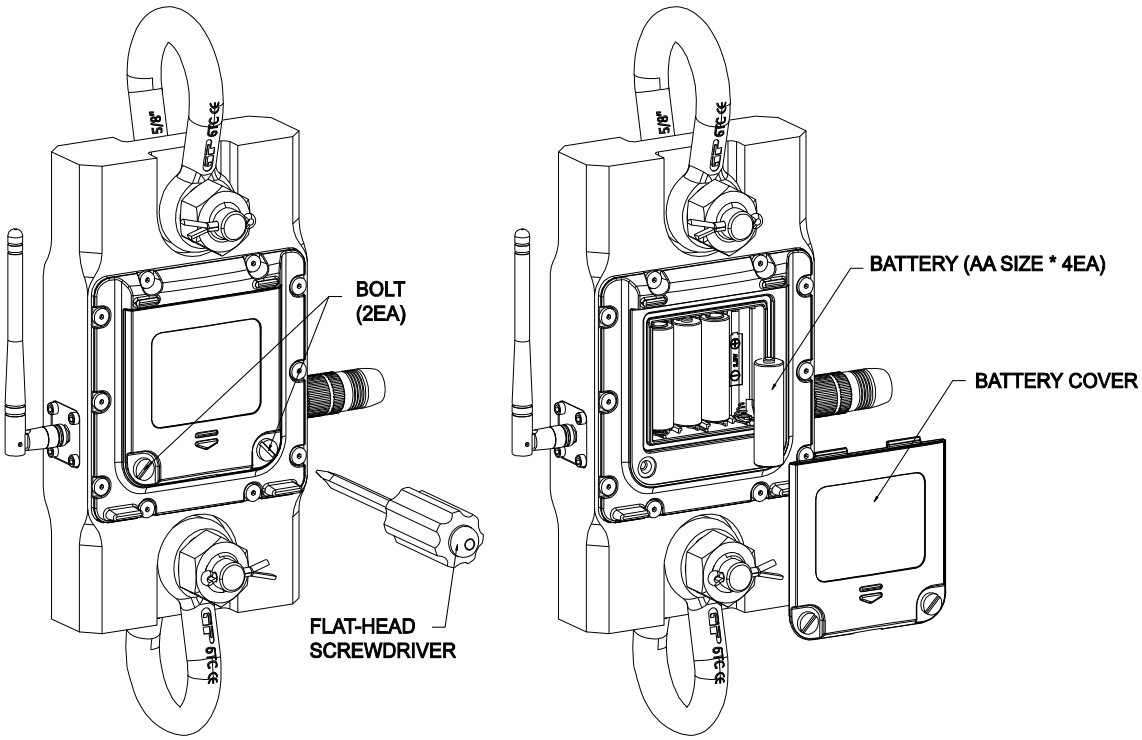

* Shut off the power supply using the power supply ON/OFF switch.

* Open the battery cover in the rear face and separate the dry-cell battery(AA SIZE*4EA).

* Put in the new batteries and use it after assembling the battery cover.
  (Make sure to put in the battery in the correct polarity)

5. FUNCTION & DESCRIPTIONS

(1). POWER ON / POWER OFF

■ Press **ON / OFF** key.

■ LCD display will be on and then, it will show from 00000 to 99999 continuously

■ Press ON/OFF key

■ LED display will show off and then power turns off

(2). ZERO FUNCTION

■ Used to correct drifted zero value when the scale is unloaded motion is not detected.

■ You can adjust the zero up to ±2% of the maximum capacity

■ The function does not work when weight is fluctuated ort unstable.

(3). TARE FUNCTION

■ Use tare function after removing the weighing material from container being used.

■ The function does not work when weight is fluctuated ort unstable.

■ The weight including TARE weight can't exceed the maximum capacity.

(4). HOLD FUNCTION

<Caution> Weighing may not be accurate when the HOLD function is used.

There are four HOLD functions : Manual / Auto , Peak , Average
To use this function , must be check Hold-type of 'HL' mode.

DISPLAY	FUNCTION
HL - 00	Manual HOLD
	Auto HOLD
HL - 01	Peak HOLD
HL - 02	Average HOLD

■ Manual HOLD (HL - 0) : Calculates the wavering weight at the moment that the HOLD key is pushed.

- Used in the case of weighing a unstable weight.
- Place the article to be weighed and push the HOLD key.
- After "MHOLD" message is displayed, the HOLD weight is indicated. (HOLD lamp is turned ON)
- HOLD function is cancelled when the zero point condition is obtained by removing the article being weighed or when the HOLD key is pushed again.

■ Auto HOLD (HL -> 0) : Automatically calculates an average value for the wavering weights.

- Used when the automatic HOLD function is employed.
- When the HOLD key is pushed in the zero point condition, the automatic HOLD function begins after "AHOLD" message is displayed. (HOLD lamp is turned ON)
- When the weighing article is placed, an average value over about 2 seconds is automatically calculated and displayed.
- When the weight is changed by more than 20 graduations from the displayed HOLD value, the average weight over 2 seconds is calculated and displayed again.
- When the HOLD key is pushed again, the automatic HOLD is cancelled.

■ Peak HOLD (HL -> 1) : Calculates the maximum value for the wavering weights.

- Used when a maximum value of the wavering weights is calculated.
- When the HOLD key is pushed in the zero point condition, the automatic HOLD function begins after "PHOLD" message is displayed. (HOLD lamp is turned ON)
- When a weight larger than the displayed HOLD weight is imposed, a maximum value is displayed again.
- When the weighed article is removed and the zero point condition is recovered, the displayed value is deleted,(The HOLD condition is maintained)
- When the HOLD key is pushed again, the HOLD function is cancelled.

■ Average HOLD (HL ->2) : Calculates an average value for the wavering weights.

- Used when a unstable weight is weighed.
- Place the weighing article and push the HOLD key.
- After "HOLD" message is displayed, the HOLD weight after about 2 seconds is displayed. (HOLD lamp is turned ON)
- When the HOLD key is pushed again or the zero-point condition is recovered by removal of the weighing article, the HOLD function is cancelled.
- Setting is possible only when OP function is set at tU or zb. (It will not be displayed without the OP setting.)

6. SET Mode Description

(1) AP MODE

Press ON key while ZERO key is pressed, then you can enter into 'AP' mode.
('AP' means 'Auto Power off')

■ Key Usage

	Used to increase the input value
	Used to save the input value and Return to Normal Mode.
	Go to Next Mode.

■ Setting Menu

DISPLAY	FUNCTION
AP-00	Not use
AP-10	Power off after keeping '0'kg 10 minute
AP-20	Power off after keeping '0'kg 20 minute
AP-30	Power off after keeping '0'kg 30 minute

(2) SLEEP MODE

Press ON key while ZERO key is pressed and Press ZERO Again, then you can enter into 'SLEEP' mode.
('Sb' means 'SLEEP'.)

■ Key Usage

	Used to increase the input value.
	Used to save the input value and Return to Normal Mode.
	Go to Next Mode.

■ Setting Menu.

DISPLAY	FUNCTION
Sb-00	Sleep mode is deactivated.
Sb-20	Sleep mode is activated after 20 seconds.
Sb-40	Sleep mode is activated after 40 seconds.
Sb-60	Sleep mode is activated after 1 minute.

(3) Key Lock MODE.

Press ON key while ZERO key is pressed and Press ZERO Twice, then you can enter into 'Key lock' mode.

■ **Key Usage**

	Used to increase the input value
	Used to save the input value and Return to Normal Mode.
	Go to Next Mode.

■ **Setting Menu**

DISPLAY	FUNCTION
LoCk	Use Key Lock.
ULoCk	Do not use Key Lock.

(4) C1 MODE

Press ON key while ZERO key is pressed and Press ZERO Three times, then you can enter into 'C1' mode.
('C1' means 'Communication Port 1' : RS-232 PORT)

■ **Key Usage**

	Used to increase the input value
	Used to save the input value and Return to Normal Mode.
	Go to Next Mode.

■ **Setting Menu**

DISPLAY	FUNCTION
C1-no	Do not use RS-232 Communication.
C1-Co	Use RS-232 Command Communication.
C1-St	Use RS-232 stream.

(5) C2 MODE

Press ON key while ZERO key is pressed and Press ZERO Four times,
then you can enter into 'C2' mode.
('C2' means 'Communication Port 2' : RS-485 & Wireless Option)

■ **Key Usage**

	Used to increase the input value
	Used to save the input value and Return to Normal Mode.
	Go to Next Mode.

■ **Setting Menu**

DISPLAY	FUNCTION
C2-no	Do not use RS-485 Communication.
C2-Co	Use RS-485 Command Communication.
C2-St	Use RS-485 stream.

(6) OP MODE

-Setting is possible only when C2 function is set at "C2-Co".

Press ON key while ZERO key is pressed and Press ZERO Five times, then you can enter into 'OP' mode.
('OP' means 'Option' : Bluetooth or X-bee wireless module)

■ Key Usage

	Used to increase the input value
	Used to save the input value and Return to Normal Mode.
	Go to Next Mode.

■ Setting Menu

DISPLAY	FUNCTION
OP-no	Do not use wireless option.
OP-tU	Use Bluetooth Module.
OP-Zb	Use X-Bee Module.

(7) Module(option) MODE

-Setting is possible only when OP function is set at tU or zb.

Press ON key while ZERO key is pressed and Press ZERO Six times, then you can enter into 'Module' mode.
(It will not be displayed without the OP setting.)

■ btSEt / CH-00

When the Option function is set at tU or ZB, the following setting window appears according to the Option setting upon pushing key.

OPTION	DISPLAY	FUNCTION
tU	rESET	1. Bluetooth Module is initialized. 2. Bluetooth Module is initialized when key is pushed. (When the initialization failed, 'rEtry' message is displayed for 2 seconds. Try again after affirming the Bluetooth Module condition.) 3. In the case that Bluetooth Module is not to be initialized, it will shift to the next mode upon pushing key.
Zb	CH 00	1. Channel for X-bee Module is set. 2. The set value is increased upon pushing key, and when setting is completed, 3. Push key to store the setting. About 3 seconds later, channel change is completed and it shifts to the next mode. Setting is possible for the channels 0~11. 4.When a channel is not set with X-bee Module, it will shift to the next mode upon pushing key.

(8) ID MODE

Press ON key while ZERO key is pressed and Press ZERO Seven times, then you can enter into 'ID' mode.
('ID' means 'Identification' : Device identification from 0 to 9 can be set.)

■ Key Usage

	Used to increase the input value
	Used to save the input value and Return to Normal Mode.
	Go to Next Mode.

■ Setting Menu

DISPLAY	FUNCTION
id-0	Device ID is set to 0.
id-9	Device ID is set to 9.

(9) HI MODE

Press ON key while ZERO key is pressed and Press ZERO Eight times, then you can enter into 'HI' mode.
('HI' means 'High' : High limit)
You can set the high limit value, up to a maximum capacity.

■ Key Usage

	Input values are initialized..
	Used to increase the input value
	Used to move the digits of 'input value'.
	Saving the input values, and entry to the 'LO' mode.

■ Setting Menu

DISPLAY	FUNCTION
HI-00000	The high limit value is set to 0. (Do not use high relay)
HI-01000	The high limit value is set to 1000. (The upper limit relay operates when the displayed weight is above 1000)

(10) LO MODE

After you enter the 'HI' value, press the HOLD key and then you can enter the 'LO' value.
('LO' means 'LOW' : Low limit)

■ Key Usage

	Input values are initialized..
	Used to increase the input value
	Used to move the digits of 'input value'.
	Saving the input values, and entry to the weighing mode.

■ Setting Menu

DISPLAY	FUNCTION
LO-00000	The low limit value is set to 0. (Do not use Low relay)
LO-00500	The high limit value is set to 500. (The lower limit relay operates when the displayed weight is above 500)

(11) HL MODE

Press ON key while HOLD key is pressed, then you can enter into 'HL' mode.
('HL' means 'Hold type'.)

■ Key Usage

	Used to increase the input value
	Used to save the input value

■ Setting Menu

DISPLAY	FUNCTION
HL-00	NO USE.
HL-01	Auto Hold / Manual Hold
HL-02	Peak Hold use
HL-03	Average Hold use

Notice :
While using the HOLD function, the weight displayed may be not exact..

(12) Set Use Unit MODE

When the power supply is turned ON with the UNIT key being pushed, the unit to be used may be set.

■ Key Usage

	Used to increase the input value
	Used to save the input value and Return to Normal Mode.
	Go to Next Mode.

■ Unit Table (kg & lb is default)

UNIT	Unit (LCD)	Display	SET
Metric Ton	X1000 kg	mt -	0 : Not Use 1 : Use
Short Ton	T	St -	0 : Not Use 1 : Use
Long Ton	T	Lt -	0 : Not Use 1 : Use
Newton	N	n -	0 : Not Use 1 : Use
Kilo Newton	X1000 N	kn -	0 : Not Use 1 : Use
Deca Newton	daN	dA -	0 : Not Use 1 : Use

Note :
1. The weight is changed by the set unit whenever the unit conversion key is pushed in the weighing mode.
2. Short Ton and Long Ton may not be used simultaneously.
- If the Short Ton is set at 1, it will not be displayed in the Long Ton setting menu.
- If the Long Ton is set at 1, it will not be displayed in the Short Ton setting menu.
3. Relationships among Short Ton, Long Ton, Metric Ton
- Short Ton(US Ton) : 1 (Short Ton) = 907 kg
- Long Ton(British Ton) : 1 (Long Ton) = 1016 kg
- Metric Ton(used in Korea and general countries) : 1(Metric Ton) = 1000 kg

4. In the case of using the relay, the relay setting values must be re-set if the unit conversion is used.

1.Setting method for connection between TWN and TM (Bluetooth)

(1) Turn on the power supply ( ) with the ZERO ( ) key pushed.
(AP - 00 is displayed.)

(2) Shift to the 'C2– ' mode by pushing the ZERO ( ) key for 4 times in a row.

(3) Select the 'C2–CO' mode by pushing the UNIT ( ) key.

(4) Shift to the 'OP– 'mode by pushing the ZERO ( ) key once.

(5) Select the 'OP–tU' mode by pushing the UNIT ( ) key. (Bluetooth module is used)

(6) Affirm the 'rESET' display by pushing the ZERO ( ) key once.

(7) Bluetooth module initialization is started when the HOLD ( ) key is pushed.

(8) When initialization of the Bluetooth module is failed, 'rEtry' is displayed,
followed by display of 'rESET'.

(9) When initialization of the Bluetooth module is completed,
it will shift to the 'id' setting after 'Ok' is displayed.

(10) Set at 'id–0' and push the key. (for communication with TWN)

2. Setting method for connection between TWN and TM (X-Bee).

(1) Turn ON the power supply( ) with the ZERO ( ) key being pushed. (AP - 00 is displayed.)

(2) Shift to the 'C2– ' mode by pushing the ZERO ( ) key for 4 times in a row.

(3) Select the 'C2–CO' mode by pushing the UNIT ( ) key.

(4) Shift to the 'OP– 'mode by pushing the ZERO ( ) key once.

(5) Select the 'OP– Zb' mode by pushing the UNIT ( ) key. (Bluetooth module is used)

(6) Shift to the channel setting mode of 'CH– ' by pushing the ZERO ( ) key once.

(6) Set the desired channel by pushing the UNIT ( ) key.
(While setting is possible for channels 0~11,
initial value upon shipment from the factory is '0').

(7) When the HOLD ( ) key is pushed, channel setting is started.

(8) When initialization of the X-Bee module is failed, 'CH- ' is displayed after 'Err' is displayed.

(9) When initialization of the X-Bee module is completed, it shifts to the 'id' setting.

(10) Set at 'id–0', and push the key. (for communication with TWN)

7. Communication PROTOCOL & Command

(1) Data Bit : 8, Stop Bit : 1, Parity Bit : None
(2) Communication Baud rate : 9600bps

ⓐ	ⓑ	,	ⓒ	ⓓ	,	ⓔ	ⓕ	,	**Weight Data (8byte)**	ⓖ	ⓗ	ⓘ	ⓙ	ⓚ

ⓐ , ⓑ	**ST (Stable), US (Unstable), OL (Over Load)**				
ⓒ , ⓓ	**GS (Gross), NT (Net)**			ⓔ	**Device ID**
ⓕ	**STATE Byte**	ⓖ	**Blank**	ⓗ, ⓘ	단위
ⓙ	**CR**	ⓚ	**LF**		

▣ Device ID : Device ID is the successive value of ASCII code.

Ex) Device No. 01 : 0x31, Device No. 09 : 0x39, Device No. 13 : 0x3d
(Device ID set in the ‘ID MODE’)

▣ Data(8 byte) :
Weight data containing a decimal point, i.e., ASCII code 8 bytes corresponding to each of ‘0’ , ‘0’ , ‘0’ , ‘0’ , ‘1’ , ‘3’ , ‘.’ , ‘5’ are transmitted in the case of 13.5 kg

▣ State Byte.

Bt7	Bt6	Bt5	Bt4	Bt3	Bt2	Bt1	Bt0
1	Stable	0	HOLD	PRINT	GROSS	TARE	ZERO

Command Mode Protocol

Command (ASCII code)	Description	State
KT	Key Tare Value	Read / Write
WT	Current Weight	Read
ZE	Operating like the ZERO key	Read
TR	Operating like the TARE key	Read
HD	Operating like the HOLD key	Read
UC	Operating like the UNIT key	Read

Read

1	2	3	4	5
Device ID	Command		CR	LF

Note. 1 Device ID is hex and Command is ASCII

[Ex] Device ID is 3 when user want to know the current weight.

->write 03 57 54 0d 0a

Write

1	2	3	4	5	6	7	8	9	10
Device ID	Command		KEY TARE					CR	LF

Note. 1 Device ID is hex and DATA is ASCII

[Ex] When user want to input Key Tare Value (to 200).

-> write 03 4B 54 30 30 32 30 30 0D 0A

[Ex] When user want to read Key Tare Value.

-> write 03 4B 54 0D 0A

8. TWN (OPTION)

Details, please refer to the Product Manual

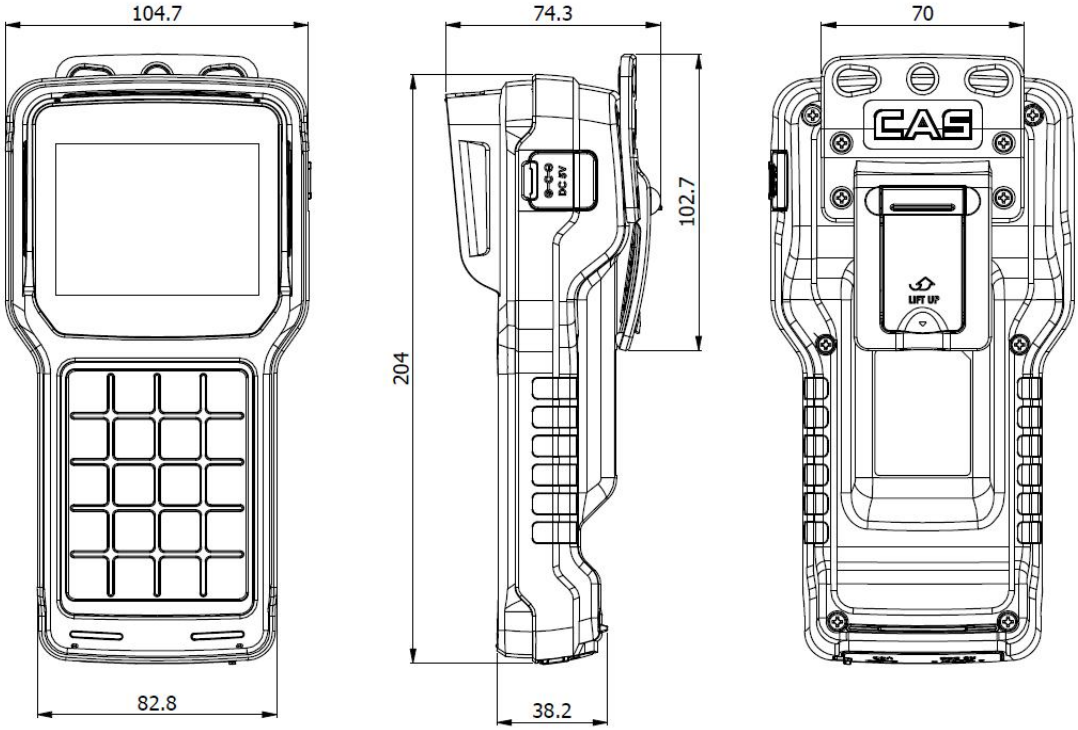

TWN Specification

Frequency	2.4GHz(433.175MHz~434.775MHz)
Communication methods	ZIGBEE (BLUETOOTH)
Baud Rate	9600
Effective distance for communications	Maximum about 50 ~ 100M
Display	320*240 TFT LCD
Display below zero	"-" minus signal
Battery life time	Approx 24hours
Battery changing time	Approx 5 ~ 6 hours
Power	TWN : Rechargeable DC Battery 3.6V 4400mA Charger : adapter
Temperature range	-10℃ ~ +40℃
Function	Printer interface, zero, tare, hold, print ID setting, weight sum.

9. PRODUCT SIZE

TM-0.5ton ~ 15ton

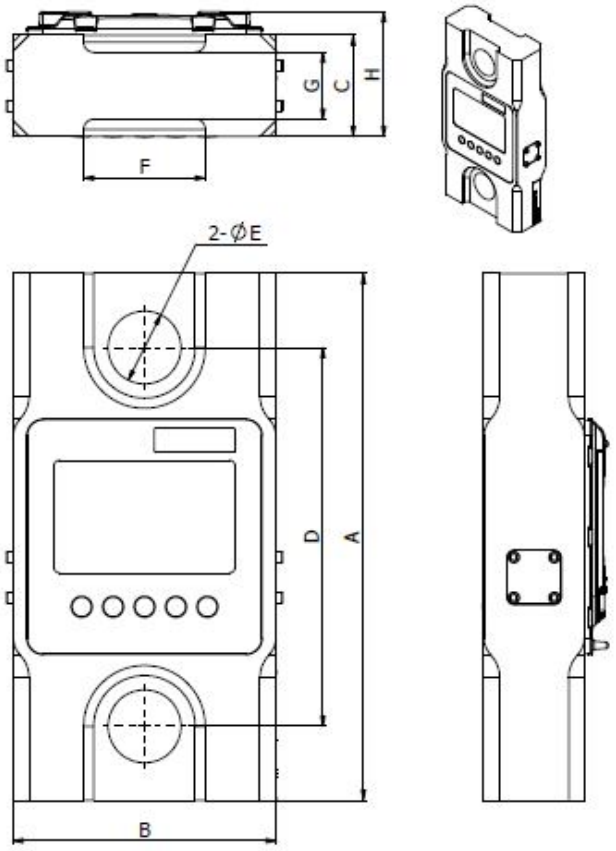

TM-25ton ~ 50ton

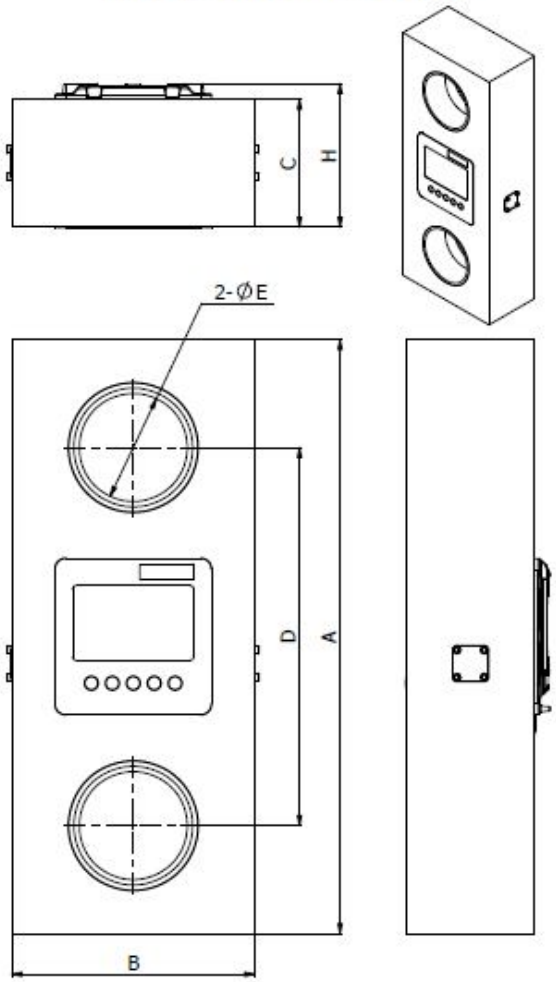

TM Series Specification

Part	TM-0.5	TM-1	TM-3	TM-5	TM-10	TM-15	TM-25	TM-50
Capacity	0.5 ton	1ton	3 ton	5 ton	10 ton	15 ton	25 ton	50 ton
Max (kg)	500	1,000	3,000	5,000	10,000	15,000	25,000	50,000
Min (kg)	10	20	40	100	200	500	500	1,000
e (=d) (kg)	0.5	1	2	5	20	50	50	100
Resolution	1/1000	1/1000	1/1500	1/1000	1/500	1/300	1/500	1/500
Safety Factor	3·1	3·1	3·1	3·1	3·1	3·1	3·1	3·1
Weight	2.3 kg	2.3 kg	2.5 kg	3.3 kg	5.1 kg	8.5 kg	10.0 kg	18.0 kg
Operation Temp.	-20℃ ~ +60℃							
Protection	IP 65, NEMA4							
Material	Alumlnum							
Dimension A	220	220	220	260	300	340	380	440
Dimension B	120	120	128	130	140	152	170	180
Dimension C	42	42	42	50	60	70	72	95
Dimension D	165	165	165	187	205	226	248	280
Dimension E	21	21	21	28	40	48	65	80
Dimension F	44	44	44	60	80	100	-	-
Dimension G	24	24	24	33	46	53	-	-
Dimension H	53	53	53	61	71	81	83	106
CROSBY SHACKLE	G-2130 5/8"	G-2130 5/8"	G-2130 5/8"	G-2130 7/8"	G-2130 1-1/4"	G-2130 1-1/2"	G-2130 1-3/4"	G-2130 2-1/2"
SHACKLE WEIGHT(PAIR)	1.24kg	1.24kg	1.24kg	3.58kg	10.62kg	17.24kg	30.8kg	89.2kg

* Shape and dimensions can be changed for the purpose of product enhancements.

10. ERROR MESSAGE

Error Message	Description	Solution
"Err 0"	The "Err 0" occurs when scale is not stable.	Remove unstable facts.
"Err 1"	The "Err 1" occurs when a current zero point has shifted from the last span calibration.	Please call your CAS dealer.
"Err 3"	The "Err 3" is an overload error.	Please remove the weight.

▶ Notice : Specifications are subject to change for improvement without notice.

PIN Description	Type	Pin Num	Wire color	Function
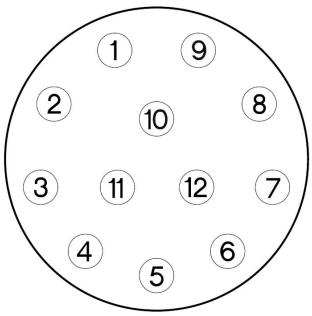	RS485	1	**Pink**	GND
		2	**Sky Blue**	Rx-
		3	**Gray**	Rx+
		4	**White**	Tx-
		5	**Purple**	Tx-
	RELAY OUT	6	**Blue**	RY_COM
		7	**Green**	RY_OUT 3
		8	**Yellow**	RY_OUT 2
		9	**Orange**	RY_OUT 1
	RS 232	10	**Black**	GND
		11	**Brown**	Tx
		12	**Red**	Rx

< 1.1> Unit change Factor Table

	kg	lb	N	KN	daN	Short ton	Long ton	Metric ton
kg	1	2.204622	9.80665	0.0098665	0.980665	0.001102311	0.000984207	0.001
lb	0.45359237	1	4.441221615	0.004422822	0.444822162	0.0005	0.000446429	0.000453592
N	0.101971621	0.224808943	1	0.001	0.1	0.000112404	0.000100361	0.000101972
KN	101.9716213	224.8089431	1000	1	100	0.112404472	0.100361135	0.101971621
daN	1.0197 16213	2.2480 89431	10	0.01	1	0.001124045	0.001003611	0.001019716
Short ton	907.18474	2000	8896.44321	8.896443231	889.6443231	1	0.892857143	0.90718474
Long ton	1016.046909	2240	9964.016418	9.964016418	996.4016418	1.12	1	1.016046909
Metric ton	1000	2204.622622	9806.65	9.80665	980.665	1.102311311	0.984206528	1

11. Calibration

1. 1 General Calibration

Pressing and holding calibration switch press [POWER] key to go to calibration mode.

User can move to other mode by using [ZERO] key in the calibration mode.

User also moves to other sub-modes for each mode by using [TARE] key.

Please simply follow below procedure to move to other mode.

(1) Calibration Mode: Pressing and holding "Calibration Switch" press [POWER] key.

(2) It displays "CAL-0" after "CAL", and it blinks the version of scale three times.

(3) Selecting menu: press [ZERO] / press [TARE].

(4) ENTER(Setting) : [HOLD] key

MODE	Function
CAL 1	Display normalized AD
CAL 2	Display Keypad information-
CAL 3	Weight Setting Mode "UnLoad" → [HOLD] → "MIDD" → [HOLD] after loading for 1/3 weight → "FULL" → [HOLD] after loading for Full weight → "MIDD" → [HOLD] after loading for 1/3 weight → "END"
CAL 4	Option Setting (Refer to the Table 1)
CAL 5	Display filtered Raw AD
CAL 6	Function setting on each Key (Refer to the Table 2)
CAL 7	% Calibration
CAL 8	Battery calibration
CAL 9	Gravity constant
CAL 10	Set calibration factor "Unit" → [ZERO] → select 0, 1 (0:kg, 1: lb) → [HOLD] "CAPA" → [ZERO] → select capacity → [HOLD] "MCAPA" → [ZERO] → select mid-capacity → [HOLD] "W-dP" → [ZERO] → Select Decimal Point → [HOLD] " 1 d " → [ZERO] → Select division → [HOLD] "Dual" → [ZERO] → Enable dual interval (0:disable, 1:enable) → [HOLD] "tare" →[ZERO] → select 0, 1 (0:proper, 1: Full) → [HOLD] →Input Tare (60000, Internal Resolution) → [HOLD]
CAL 11	Set AD as default (99), Set KEY as default (98)

1.1.1.C4 Setting

1.1.1.1. C4-1 Setting

BIT 6~7	Initial Zero range	3	5%
		2	10%
		1	3%
		0	2%
BIT5			
BIT4			
BIT 2~3	Successive tare	3	(+), (-) Direction successive Tare
		2	(-) Direction successive Tare
		1	(+) Direction successive Tare
		0	One Time tare
BIT1			
BIT0			

1.1.1.2. C4-2 Setting

NOT USE

1.1.1.3. C4-3 Setting

NOT USE

1.1.1.4. C4-4 Setting

NOT USE

1.1.1.5. C4-5 Setting

NOT USE

1.1.2.SPAN Calibration Setting (C-3)

(1) Pressing and holding “Calibration Switch” press [POWER] key.

(2) After “CAL” message blinks three times and shows the version of scale, it displays “CAL 1” message.

(3) Press [ZERO] / [TARE] to display “CAL-3”.

(4) Press [HOLD] key and then it displays “zero ” message.

(5) Press [HOLD] key and then it displays “midup” message

(6) Load middle weight (ex:1/3 full capacity) on the platform

(7) Press [HOLD] key and then it displays “span ” message

(8) Load full weight on the platform

(9) Press [HOLD] key and then it displays “middn” message

(10) Load middle weight (ex:1/3 full capacity) on the platform

(11) Press [HOLD] key and then it display “CAL 3” message

1.1.3. Gravity Constant Value Setting (C-9)

Current gravitational Acceleration value is set to 9.7994 m/s^2.

(1) Pressing and holding "Calibration Switch" press [POWER] key.

(2) After "CAL" message blinks three times and shows the version of scale, it displays "CAL-1" message.

(3) Press [ZERO] / [TARE] to display "C-9".

(4) Press [HOLD] key, and then "G-1"message and "9.7994" will be shown. The first digit,"9" will blink.

(5) Input a gravitational acceleration value by using [ZERO] / [TARE] key.

(6) Press [HOLD] key, and then "G-2" message blinks. "9.7994" will be shown. The first digit,"9" will blink.

(7) Input a gravitational acceleration value by using [ZERO] / [TARE] key.

(8) Press [HOLD] key to save the gravitational acceleration value, and "C-9" message will be shown.

1.1.4. Calibration factor Setting (C-10)

(1) Pressing and holding "Calibration Switch" press [POWER] key.

(2) After "CAL" message blinks three times and shows the version of scale, it displays "CAL-1" message.

(3) Press [ZERO] / [TARE] to display "C-10".

(4) Press [HOLD] key, and then "UNIT " message and "0" will be shown. The first digit,"0" will blink. It means calibration unit is "kg" (0 : kg, 1 : lb)

(5) Input a calibration unit by using [ZERO] / [TARE] key.

(6) Press [HOLD] key, and then "CAPA" message blinks."3000" will be shown. The first digit,"0" will blink. It means a full-capability is "3000 (calibration unit, kg or lb)"

(7) Input a capability by using [ZERO] / [TARE] key.

(8) Press [HOLD] key, and then "MID" message blinks."1500" will be shown. The first digit,"0" will blink. It means a mid-capability is "1500 (calibration unit, kg or lb)"

(9) Input a capability by using [ZERO] / [TARE]key.

(10) Press [HOLD] key, and then "W-dP " message blinks."0" will be shown. The first digit,"3" will blink. It means a weight decimal point is "0 (will display 0.000)"

(11) Input a weight decimal point by using [ZERO] / [TARE] key.

(12) Press [HOLD] key, and then "1d " message blinks."01" will be shown. The third digit,"0" will blink. It means a division is "01 (calibration unit, kg or lb)"

(13) Input a division by using [ZERO] / [TARE] key.

(14) Press [HOLD] key, and then "dual" message blinks."0" will be shown. The third digit, "1" will blink. It means a dual interval is disable.(0 : disable, 1 : enable)"

(15) Notice -> CASTON series is Single-Range.

(16) Input a dual interval enable by using [ZERO] / [TARE] key.

(17) Press [HOLD] key to save the calibration factor, and "C-10" message will be shown.

1.1.5. Displaying Real A/D Value (C-5)

Display Raw AD

1.1.6. Input Function Key Code (C-6)

NOT USE

1.1.7. Percent Calibration (C-7)

∗ Please Check the C-10 "MID" Value and Set 0.

(1) Pressing and holding "Calibration Switch" press [POWER] key.
After "CAL" message blinks three times and shows the version of scale, it displays "CAL 1" message.

(2) Press [ZERO]/ [TARE] to display "CAL-7".

(3) Press [HOLD] key and then it displays "wspan0" message. Input the weight value using the [ZERO]/ [TARE] key. You can input weight value.

(4) Press [HOLD] key and then it displays "zero" message

(5) Press [HOLD] key and then it displays "wspan" message

(6) Load choice percentage weight of full weight on the platform

(7) Press [HOLD] key and then it displays "CAL 7" message

1.1.8. Battery Calibration (C-8)

(1) Pressing and holding "Calibration Switch" press [POWER] key.
After "CAL" message blinks three times and shows the version of scale, it displays "CAL 1" message.

(2) Press [ZERO]/ [TARE] to display "CAL-8".

(3) Press [HOLD] key and then it displays voltage of battery.

(4) Change the jumper-pin of main PCB, 'BAT' to '+5V'.

(5) Press [ZERO]/ [TARE] key two times and then Press [-] key two times.
And then it display '500'

(6) Change the jumper-pin of main PCB, '+5V' to 'BAT'.

(7) You can see the calibrated voltage of battery

12. UPDATE.

1. Connection (PC – TM)

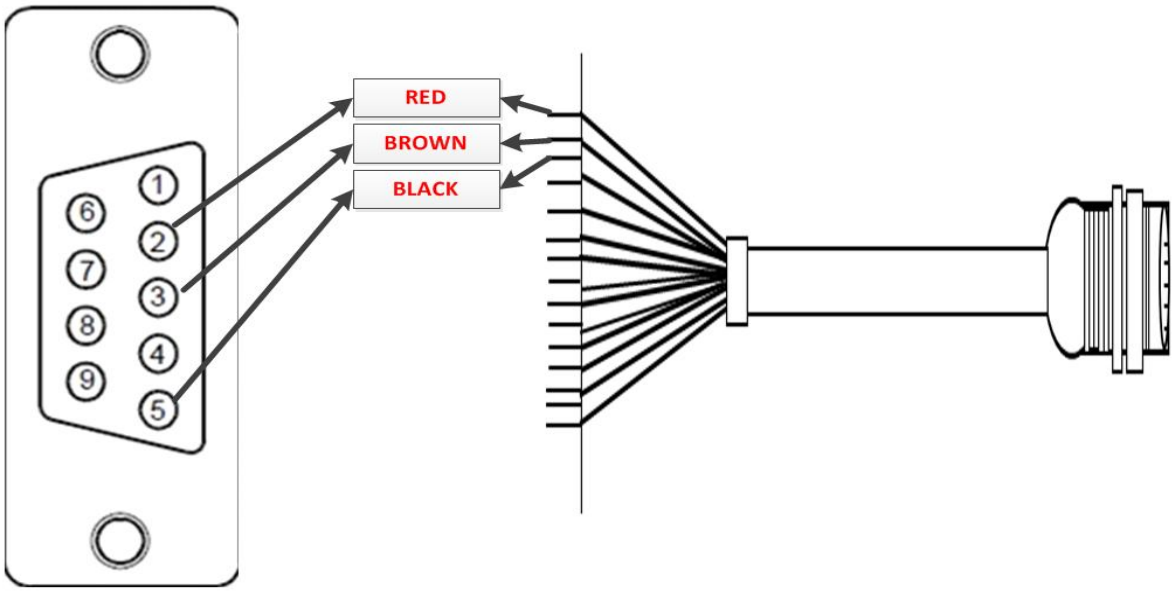

2. Open Rear Cover.

3. “3.3V Pin” & “CTL_SWCLK Pin” SHORT.

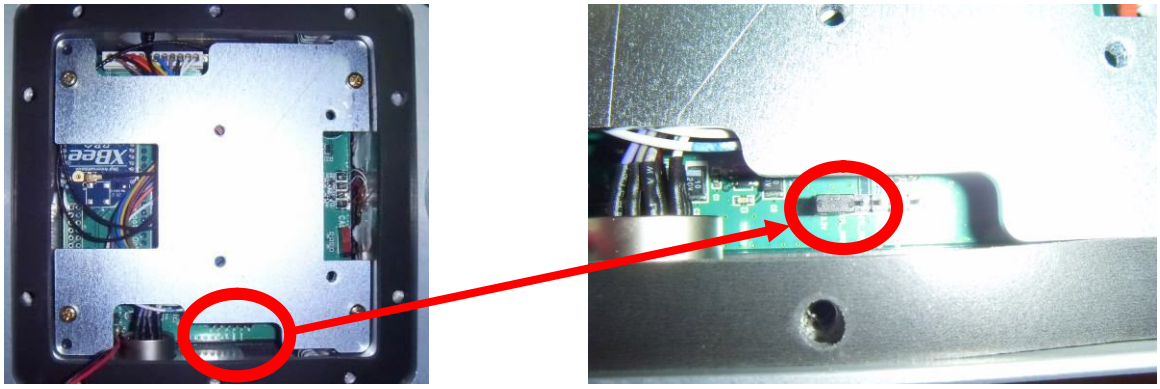

4. RUN “TERA TERM”

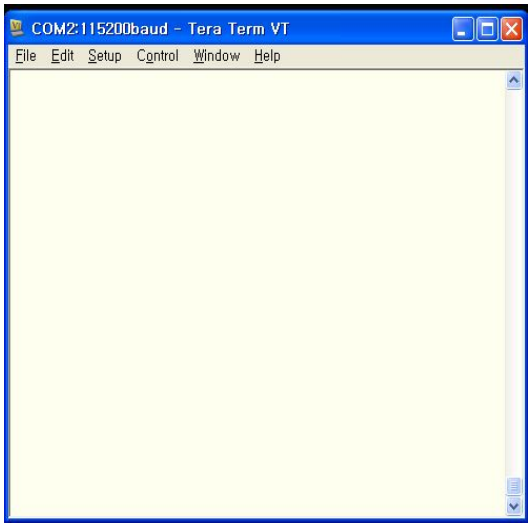

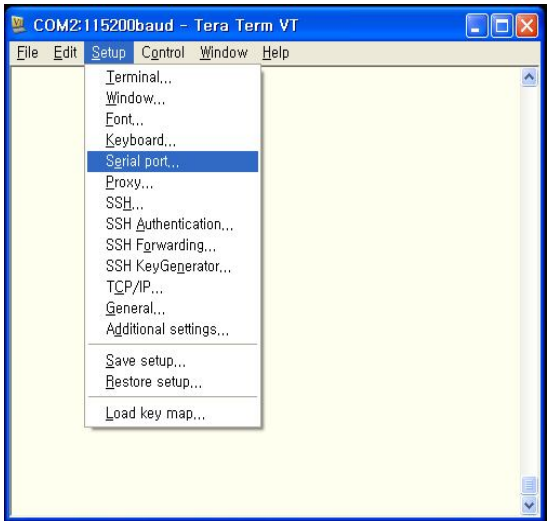

5. SET Parameter (COM Prot, Baudrate, Data, Parity, Stop, Flow control)

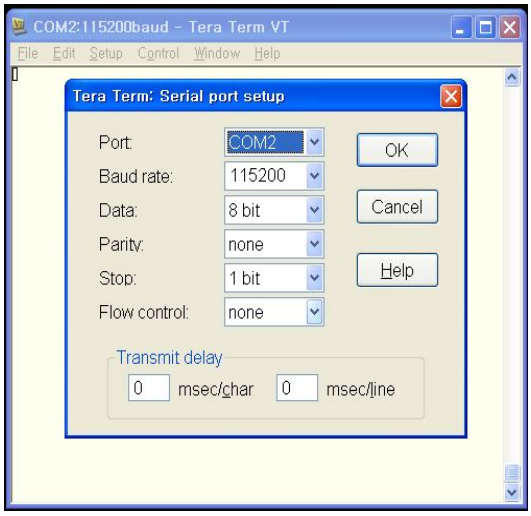

6. **Press Power Key (TM).** **Press 'u' Key on the Keyboard (PC).**

7. File -> Transfer -> XMODEM -> Send.

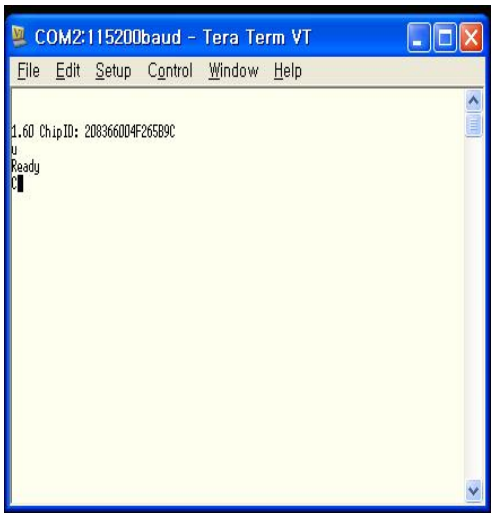

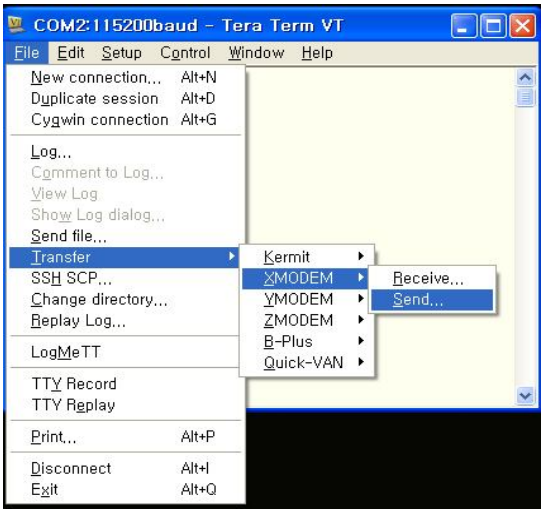

8 - (1) Select ROM File (Binary)

(2) Check CRC

(3) Press Open Button.

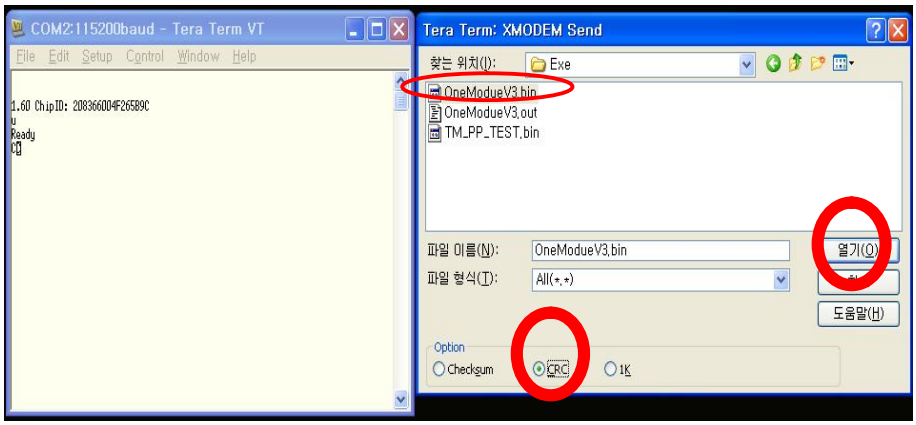

9. Download Start.

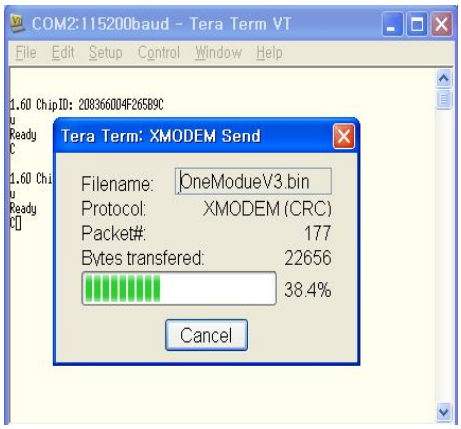

13. Exploded View.

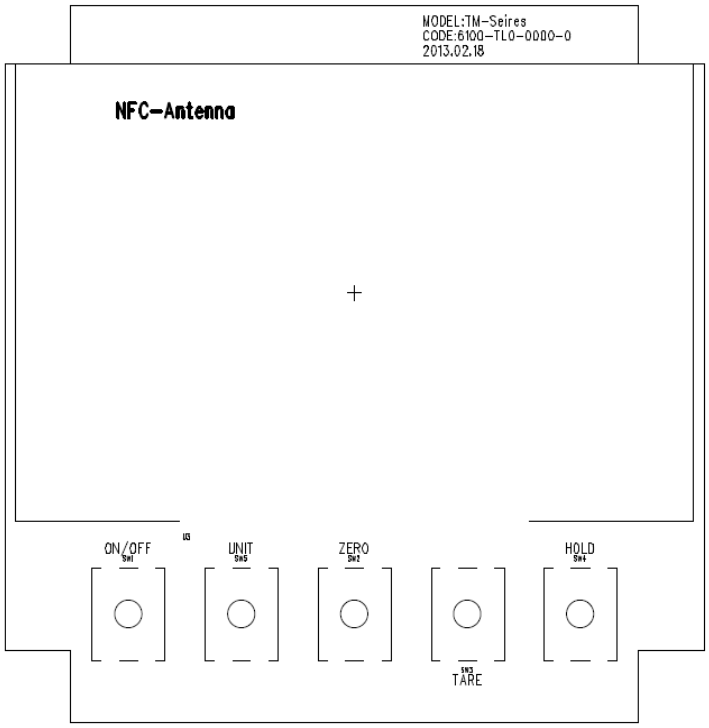

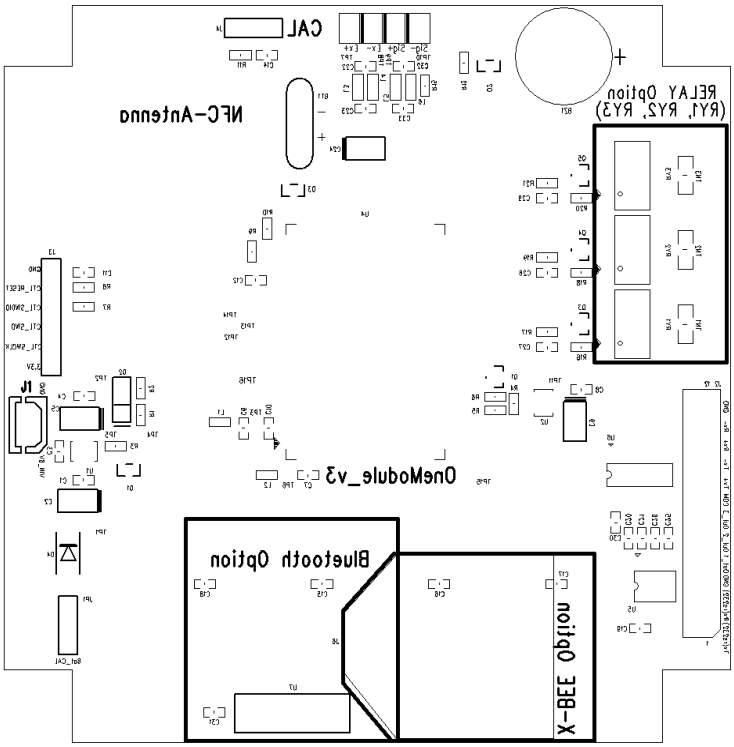

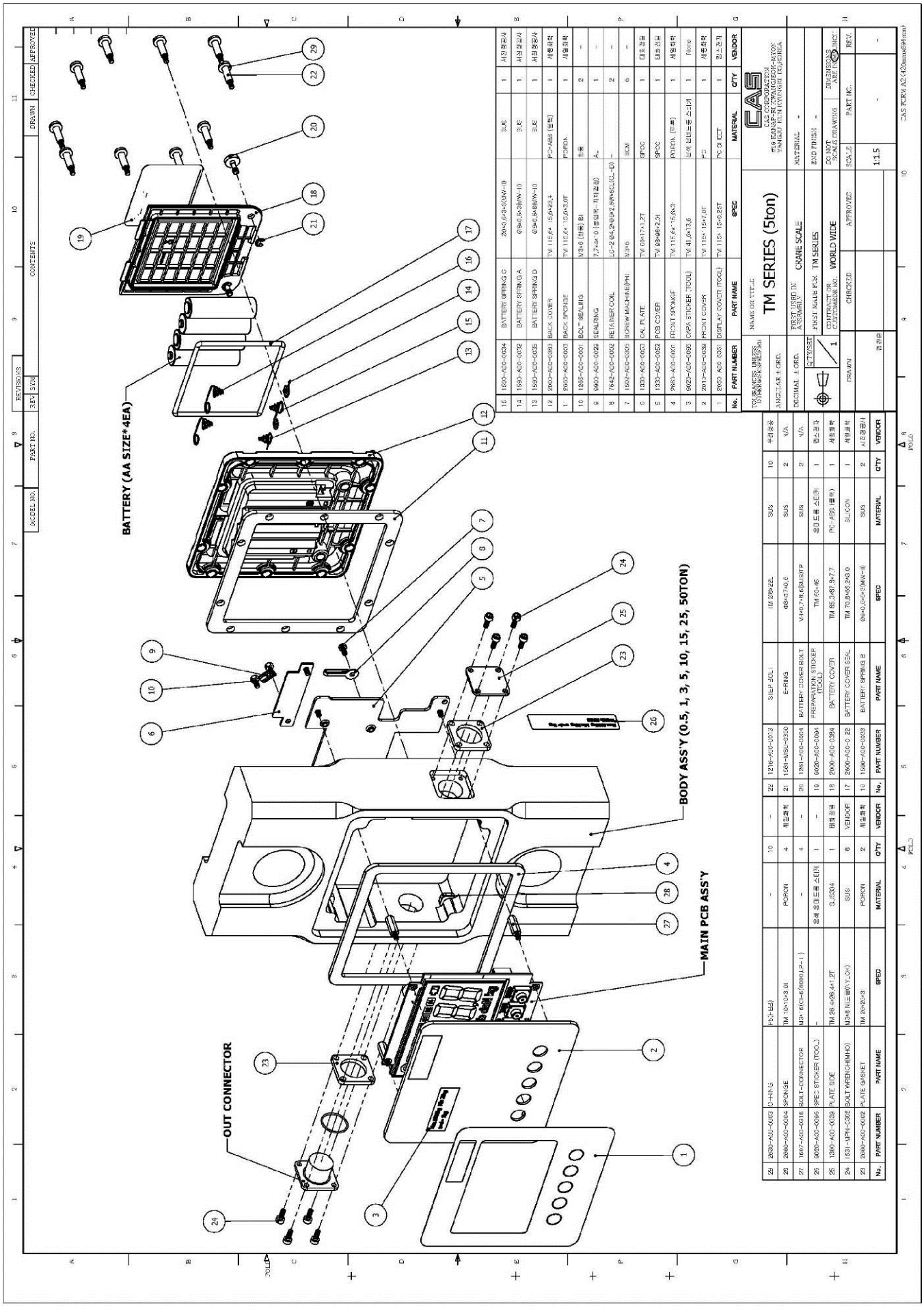
BATTERY (AA SIZE*4EA)
BODY ASS'Y (0.5, 1, 3, 5, 10, 15, 25, 50TON)
MAIN PCB ASS'Y
OUT CONNECTOR
TM SERIES (5ton)
CAS CORPORATION

14. PartList.

1. Main PCB ASS'Y (Standard).

No	Part Code	Parts Name	DESCRIPTION	Q'TY	6100-TL0-0000-0
1	6100TL000000	PCB MAIN	PCB MAIN (TM-Series)	1	U4 (OneModule V3)
2	6PB0A0000000	One-Module_V3	One-Module_V3	1	U3
3	721200500010	LCD	EL00493TS6_B	1	U1
4	6220IS0C332A	IC(REGULATOR)	LP2985A8M5X(3.3)	1	U2
5	6220IS062100	IC(REGULATOR)	XC6210D332MR(3.3)	1	U5
6	6232IS032320	IC(INTERFACE)	SP3232ECY(3.3V)	4	C2,C5,C9,C24
7	6702CAP0106B	CONDENSER-TANTAL CHIP	TANTAL SMD(C) 25V/10uF	2	R9,R10
8	6528ID000000	RESISTOR-CHIP 1/10W(1608)	RR0816P-000D(0Ω)	2	R11,R12
9	6528ID010000	RESISTOR-CHIP 1/10W(1608)	RR0816P-101D(100Ω)	3	R16,R18,R20
10	6528ID022000	RESISTOR-CHIP 1/10W(1608)	RR0816P-221D(220Ω)	3	R17,R19,R21
11	6528ID300100	RESISTOR-CHIP 1/10W(1608)	RR0816P-102D(1KΩ)	2	R4,R7
12	6528ID301000	RESISTOR-CHIP 1/10W(1608)	RR0816P-103D(10KΩ)	5	R1,R3,R5,R6,R8
13	6528ID310000	RESISTOR-CHIP 1/10W(1608)	RR0816P-104D(100K)	1	R2
14	6528ID312200	RESISTOR-CHIP 1/10W(1608)	RR0816P-104D(122K)	1	R15
15	6528ID600100	RESISTOR-CHIP 1/10W(1608)	RR0816P-105D(1MΩ)	1	C3
16	6713CHP01030	CONDENSER-CHIP	CS1608 103J500NR(10nF)	21	C1,C6,C7,C8,C10, C12,C14,C15,C16,C17, C18,C19,C22,C23,C27, C28,C29,C30,C31,C32,C33
17	6713CHP01040	CONDENSER-CHIP	CS1608 104J500NR(100nF)	5	C11,C20,C21,C25,C26
18	6713CHP01050	CONDENSER-CHIP	CS1608 105J500NR(1uF)	1	C4
19	6713CHP02250	CONDENSER-CHIP	CS1608 225J500NR(2.2uF)	1	D1
20	6290ISW2838A	DUAL SWITCHING DIODES	MMBD2836LT1	1	D3
21	6290ISW28381	DUAL SWITCHING DIODES	MMBD2838LT1	1	D2
22	6294ISW41480	DIODE-SWITCHING	1N4148P	1	D4
23	6291IS058190	DIODE POWER	1N5819(SMD)	2	L1,L2
24	6810F0001020	INDUCTANCE(1608)	HB-1M1608-102JT	2	L3,L4
25	6670T0200100	INDUCTANCE	10uH	2	L5,L6
26	6670T0200470	INDUCTANCE	47uH	1	Q2
27	6281I0015040	TRANSISTOR CHIP	KTA1504 SY	4	Q1,Q3,Q4,Q5
28	6281I0022220	TRANSISTOR-CHIP	2N2222	5	SW1,SW2,SW3,SW4,SW5
29	7600STA1104A	TACT S/W	KPT-1104B(DJTA-1112A)	1	BT1

30	7520P002032A	BATTERY	CR2032-3V(PIN TYPE)	1	BZ1
31	7002Z0001200	PIEZO BUZZER	14A4012P(EFM-250A)	1	U6
32	6232IS034910	IC(INTERFACE)	MAX3491-SOP	0.3	JP1,J3
33	7813C000040A	PIN HEADER	A2-40PA-2.54DS	1	J4
34	7600SLD00020	SLIDE S/W	INCA-2(DJMM-12V)	3	RY1,RY2,RY3
35	7600SRY21000	RELAY(PHOTO MOS)	AQV210S_SMD	3	TN1,TN2,TN3
36	6271I0056000	VARSTOR	SFI1206ML560C	1	J2
37	7805CCN67120	CONNECTOR(WAFER)	12-5267	3	LCD 아래에….
38	2631A0000230	CUSHION-BATTERY COVER	40*26*2T(MWII,DBB,ER)	0.5	J6
39	7813A0000020	PIN HEADER SOCKET	2mm Pitch(1x40)_X-Bee Module	1	JP1
40	7821CJM00020	JUMPER	2PIN	1	6100-TL0-0000-0

2. Option PCB ASS'Y (Bluetooth).

No	Part Code	Parts Name	DESCRIPTION	Q'TY	6100-TL0-0000-0
1	6100TL000000	PCB MAIN	PCB MAIN (TM-Series)	1	U4 (OneModule V3)
2	6PB0A0000000	One-Module_V3	One-Module_V3	1	U3
3	721200500010	LCD	EL00493TS6_B	1	U1
4	6220IS0C332A	IC(REGULATOR)	LP2985A8M5X(3.3)	1	U2
5	6220IS062100	IC(REGULATOR)	XC6210D332MR(3.3)	1	U5
6	6232IS032320	IC(INTERFACE)	SP3232ECY(3.3V)	4	C2,C5,C9,C24
7	6702CAP0106B	CONDENSER-TANTAL CHIP	TANTAL SMD(C) 25V/10uF	2	R9,R10
8	6528ID000000	RESISTOR-CHIP 1/10W(1608)	RR0816P-000D(0Ω)	2	R11,R12
9	6528ID010000	RESISTOR-CHIP 1/10W(1608)	RR0816P-101D(100Ω)	3	R16,R18,R20
10	6528ID022000	RESISTOR-CHIP 1/10W(1608)	RR0816P-221D(220Ω)	3	R17,R19,R21
11	6528ID300100	RESISTOR-CHIP 1/10W(1608)	RR0816P-102D(1KΩ)	2	R4,R7
12	6528ID301000	RESISTOR-CHIP 1/10W(1608)	RR0816P-103D(10KΩ)	5	R1,R3,R5,R6,R8
13	6528ID310000	RESISTOR-CHIP 1/10W(1608)	RR0816P-104D(100K)	1	R2
14	6528ID312200	RESISTOR-CHIP 1/10W(1608)	RR0816P-104D(122K)	1	R15
15	6528ID600100	RESISTOR-CHIP 1/10W(1608)	RR0816P-105D(1MΩ)	1	C3
16	6713CHP01030	CONDENSER-CHIP	CS1608 103J500NR(10nF)	21	C1,C6,C7,C8,C10, C12,C14,C15,C16,C17, C18,C19,C22,C23,C27, C28,C29,C30,C31,C32,C33
17	6713CHP01040	CONDENSER-CHIP	CS1608 104J500NR(100nF)	5	C11,C20,C21,C25,C26
18	6713CHP01050	CONDENSER-CHIP	CS1608 105J500NR(1uF)	1	C4
19	6713CHP02250	CONDENSER-CHIP	CS1608 225J500NR(2.2uF)	1	D1
20	6290ISW2838A	DUAL SWITCHING DIODES	MMBD2836LT1	1	D3
21	6290ISW28381	DUAL SWITCHING DIODES	MMBD2838LT1	1	D2
22	6294ISW41480	DIODE-SWITCHING	1N4148P	1	D4
23	6291IS058190	DIODE POWER	1N5819(SMD)	2	L1,L2
24	6810F0001020	INDUCTANCE(1608)	HB-1M1608-102JT	2	L3,L4
25	6670T0200100	INDUCTANCE	10uH	2	L5,L6
26	6670T0200470	INDUCTANCE	47uH	1	Q2
27	6281I0015040	TRANSISTOR CHIP	KTA1504 SY	4	Q1,Q3,Q4,Q5
28	6281I0022220	TRANSISTOR-CHIP	2N2222	5	SW1,SW2,SW3,SW4,SW5
29	7600STA1104A	TACT S/W	KPT-1104B(DJTA-1112A)	1	BT1
30	7520P002032A	BATTERY	CR2032-3V(PIN TYPE)	1	BZ1
31	7002Z0001200	PIEZO BUZZER	14A4012P(EFM-250A)	1	U6
32	6232IS034910	IC(INTERFACE)	MAX3491-SOP	0.3	JP1,J3

33	7813C000040A	PIN HEADER	A2-40PA-2.54DS	1	J4
34	7600SLD00020	SLIDE S/W	INCA-2(DJMM-12V)	3	RY1,RY2,RY3
35	7600SRY21000	RELAY(PHOTO MOS)	AQV210S_SMD	3	TN1,TN2,TN3
36	6271I0056000	VARSTOR	SFI1206ML560C	1	J2
37	7805CCN67120	CONNECTOR(WAFER)	12-5267	3	LCD 아래에....
38	2631A0000230	CUSHION-BATTERY COVER	40*26*2T(MWII,DBB,ER)	0.5	J6
39	7813A0000020	PIN HEADER SOCKET	2mm Pitch(1x40)_X-Bee Module	1	JP1
40	7821CJM00020	JUMPER	2PIN	1	6100-TL0-0000-0
41	9505A0000240	BLUETOOTH MODULE	ESD-3.3V	1	U7
42	7840W001106A	CABLE ASS'Y	RG316*100MM(오른나사)	1	Antenna Wire(BT)
43	9505A0000390	STUB-ANT	STUB-100M-R	1	Short Antenna
44	9505A000025C	DI-POLE ANT(오른나사)	DI-POLE 124mm(ZigBee)	1	Short Antenna

3. Option PCB ASS'Y (X-Bee).

No	Part Code	Parts Name	DESCRIPTION	Q'TY	6100-TL0-0000-0
1	6100TL000000	PCB MAIN	PCB MAIN (TM-Series)	1	U4 (OneModule V3)
2	6PB0A0000000	One-Module_V3	One-Module_V3	1	U3
3	721200500010	LCD	EL00493TS6_B	1	U1
4	6220IS0C332A	IC(REGULATOR)	LP2985A8M5X(3.3)	1	U2
5	6220IS062100	IC(REGULATOR)	XC6210D332MR(3.3)	1	U5
6	6232IS032320	IC(INTERFACE)	SP3232ECY(3.3V)	4	C2,C5,C9,C24
7	6702CAP0106B	CONDENSER-TANTAL CHIP	TANTAL SMD(C) 25V/10uF	2	R9,R10
8	6528ID000000	RESISTOR-CHIP 1/10W(1608)	RR0816P-000D(0Ω)	2	R11,R12
9	6528ID010000	RESISTOR-CHIP 1/10W(1608)	RR0816P-101D(100Ω)	3	R16,R18,R20
10	6528ID022000	RESISTOR-CHIP 1/10W(1608)	RR0816P-221D(220Ω)	3	R17,R19,R21
11	6528ID300100	RESISTOR-CHIP 1/10W(1608)	RR0816P-102D(1KΩ)	2	R4,R7
12	6528ID301000	RESISTOR-CHIP 1/10W(1608)	RR0816P-103D(10KΩ)	5	R1,R3,R5,R6,R8
13	6528ID310000	RESISTOR-CHIP 1/10W(1608)	RR0816P-104D(100K)	1	R2
14	6528ID312200	RESISTOR-CHIP 1/10W(1608)	RR0816P-104D(122K)	1	R15
15	6528ID600100	RESISTOR-CHIP 1/10W(1608)	RR0816P-105D(1MΩ)	1	C3
16	6713CHP01030	CONDENSER-CHIP	CS1608 103J500NR(10nF)	21	C1,C6,C7,C8,C10, C12,C14,C15,C16,C17, C18,C19,C22,C23,C27, C28,C29,C30,C31,C32,C33
17	6713CHP01040	CONDENSER-CHIP	CS1608 104J500NR(100nF)	5	C11,C20,C21,C25,C26
18	6713CHP01050	CONDENSER-CHIP	CS1608 105J500NR(1uF)	1	C4
19	6713CHP02250	CONDENSER-CHIP	CS1608 225J500NR(2.2uF)	1	D1
20	6290ISW2838A	DUAL SWITCHING DIODES	MMBD2836LT1	1	D3
21	6290ISW28381	DUAL SWITCHING DIODES	MMBD2838LT1	1	D2
22	6294ISW41480	DIODE-SWITCHING	1N4148P	1	D4
23	6291IS058190	DIODE POWER	1N5819(SMD)	2	L1,L2
24	6810F0001020	INDUCTANCE(1608)	HB-1M1608-102JT	2	L3,L4
25	6670T0200100	INDUCTANCE	10uH	2	L5,L6
26	6670T0200470	INDUCTANCE	47uH	1	Q2
27	6281I0015040	TRANSISTOR CHIP	KTA1504 SY	4	Q1,Q3,Q4,Q5
28	6281I0022220	TRANSISTOR-CHIP	2N2222	5	SW1,SW2,SW3,SW4,SW5
29	7600STA1104A	TACT S/W	KPT-1104B(DJTA-1112A)	1	BT1
30	7520P002032A	BATTERY	CR2032-3V(PIN TYPE)	1	BZ1
31	7002Z0001200	PIEZO BUZZER	14A4012P(EFM-250A)	1	U6
32	6232IS034910	IC(INTERFACE)	MAX3491-SOP	0.3	JP1,J3

33	7813C000040A	PIN HEADER	A2-40PA-2.54DS	1	J4
34	7600SLD00020	SLIDE S/W	INCA-2(DJMM-12V)	3	RY1,RY2,RY3
35	7600SRY21000	RELAY(PHOTO MOS)	AQV210S_SMD	3	TN1,TN2,TN3
36	6271I0056000	VARSTOR	SFI1206ML560C	1	J2
37	7805CCN67120	CONNECTOR(WAFER)	12-5267	3	LCD 아래에....
38	2631A0000230	CUSHION-BATTERY COVER	40*26*2T(MWII,DBB,ER)	0.5	J6
39	7813A0000020	PIN HEADER SOCKET	2mm Pitch(1x40)_X-Bee Module	1	JP1
40	7821CJM00020	JUMPER	2PIN	1	6100-TL0-0000-0
41	9505A0002400	X-BEE MODULE	X-BEE Pro DigiMesh 2.4Ghz	1	j6
42	7840W0020000	CABLE ASS'Y	Hirose UFL Connector(mm)	1	Antenna Wire(X-bee)
43	9505A0000390	STUB-ANT	STUB-100M-R	1	Short Antenna
44	9505A000025C	DI-POLE ANT(오른나사)	DI-POLE 124mm(ZigBee)	1	Short Antenna

4. E-Body ASS'Y

No	Part Code	Parts Name	DESCRIPTION	Q'TY	6100-TL0-0000-0
1	7810TL012150	CONNECTOR WIRE ASS'Y	TM_12pin(Female)_200mm	1	판넬타입
2	7810TL012300	CONNECTOR WIRE ASS'Y	TM_12pin(Male)_300mm	1	액세서리 와이어
3	7840TL022600	CONNECTOR WIRE ASS'Y	2P*260mm (TM_POWER)	1	베터리 와이어 연결
4	7520P0015000	BATTERY-ALKALINE	BEXEL AA 1.5V LR06 (RW-Z)	1	베터리

MECHANICAL PART

1. FRONT CASE ASS'Y

No.	IMAGE	PART CODE	REV	PART NAME	SPEC	Q'TY
1		2010-A00-0039	0	FRONT COVER	TM 115*115*7.0T	1
2		2660-A00-0001	0	FRONT SPONGE	TM 115.6*115.6*3.0T	1
3		1330-A00-0052	0	PCB COVER	TM 98*98*2.0T	1
4		1330-A00-0053	0	CAL PLATE	TM 60*17*1.2T	1
5		1265-A00-0001	0	SEALING BOLT	M3*9(황동,HEAD 3mm포함)	2
6		1507-A00-0315	0	BOLT-CONNECTOR	M3*15(CI-5/6000,LP-Ⅱ)	4
7		1502-A00-0306	0	SCREW-MACHINE(PH)	M3*6L	6
8		1300-A00-0039	0	PLATE SIDE	TM 26.4*26.4*1.2T	1
9		2660-A00-0002	0	PLATE GASKET	TM 26*26*3t	2
10	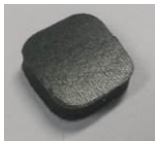	2660-A00-0004	0	SPONGE	TM 10*10*3.0t	4
11		7642-A00-0001	0	RETAINER COIL	LB-2 Ø3.2*Ø6*2.6W*50L	2

12		1530-MSU-0308	0	BOLT-WRENCH	M3*0.7*8-SUS	8

2. BACK CASE ASS'Y

No.	IMAGE	PART CODE	REV	PART NAME	SPEC	Q'TY
1		2000-A00-0383	0	BACK COVER	TM 115.6*115.6*23.4	1
2		2000-A00-0384	0	BATTERY COVER	TM 85.3*87.8*7.7	1
3		2600-A00-0122	0	BATTERY COVER SEAL	TM 70.8*65.2*3.0	1
4		2660-A00-0003	0	BACK SPONGE	TM 115.6*115.6*3T	1
5		1261-A00-0004	0	BATTERY COVER BOLT	M4*0.7*8.5(SUS)TP	2
6		1561-MSU-0300	0	E-RING	Ø3*Ø7*0.6t	2
7		1590-A00-0032	0	BATTERY SPRING A	Ø9*0.6*3(MW-II)	1
8		1590-A00-0033	0	BATTERY SPRING B	Ø9*0.6*6*3(MW-II)	2
9		1590-A00-0034	0	BATTERY SPRING C	Ø9*0.6*3*6(MW-II)	1
10		1590-A00-0035	A	BATTERY SPRING D	Ø9*0.6*8(MW-II)	1

11		2630-A00-0003	0	O-RING	P5(HBB)	10
12		1261-A00-0013	0	STEP BOLT	TM Ø8*19L	10

3. IMAGE ASS'Y

No.	IMAGE	PART CODE	REV	PART NAME	SPEC	Q'TY
1		2050-A00-6361	0	DISPLAY COVER (TOOL)	TM 115.8*115.8*0.5T	1
2		9020-A00-0095	0	CAPA STICKER (TOOL)	TM 41.6*13.6	1
3		9020-A00-0094	0	PREPARATION STICKER (TOOL)	TM 60*45	1
4		9020-FW4-2000	0	STICKER (SPEC.)	64*14	1
5		9020-FW4-2033	0	STICKER (SPEC.)	64*14	1

4. C/T BOX ASS'Y (0.5ton ~ 5ton)

No.	IMAGE	PART CODE	REV	PART NAME	SPEC	Q'TY
1		9104-A00-0013	0	CT BOX (TOOL)	TM 450*350*117	1
2		9104-A00-0014	0	CT BOX PAD	TM 440*340*7	1
3		9204-A00-0007	0	PE BOX	TM 450*350*110	1

5. OPTION (WIRELESS)

No.	IMAGE	PART CODE	REV	PART NAME	SPEC	Q'TY
1		9104-A00-0013	0	CT BOX (TOOL)	TM 450*350*117	1