MAINTENANCE MANUAL

AGS-NTEP / VGS SERIES

CONTENTS

1. INTRODUCTION

2. SPECIFICATIONS
- 2.1 SYSTEM BLOCK DIAGRAM
- 2.2 PHYSICAL LAYOUT OF ELECTRICAL CONNECTION
- 2.3 GENERAL SPECIFICATIONS
- 2.4 INTERNAL SETTINGS AND CALIBRATION METHODS

3. TROUBLE SHOOTING
- 3.1 TROUBLE SHOOTING LOOP
- 3.2 PARTS AND COMPONENTS TROUBLE SHOOTING

4. ELECTRICAL CIRCUITRY
- 4.1 SCHEMATICS
- 4.2 PCB LAYOUT

5. BILL OF MATERIAL

6. APPENDIX

AUGUST 2018

Specifications and Function Subject to Change without Notice

1. INTRODUCTION

The AGS-NTEP / VGS series are designed and programmed according to the NTEP Class III requirements.

These scale are sealed to prevent unauthorized access to internal parts. Ender users should be advised not to undertake any trouble shooting except those listed on the operation manual.

This maintenance manual contains of certain information that may result in fraudulent use. Do not release any part of this manual to any end users or un-authorized persons.

The internal mini jumper should be so set to prevent un-authorized settings or alternations.

Should a load cell has been replaced, make sure that the protection devices are properly set.

After servicing, it is necessary to go through all tests and procedures to ensure the scale meets all the meteorological and approval requirements.

Here are some features of the AGS-NTEP / VGS series

1. Designed to meet NTEP class III requirements.
2. Zero Indicator.
3. Net Indicator.
4. Negative Value Indicator.
5. Auto Tare Function.
6. Power on Zero Function.
7. Manual Zero Function.
8. PCS / % / Check Weighing Functions.
9. Accumulation Function
10. Auto Power Saving Function.
11. Metric/Avoirdupois Conversion Function.
12. Power Level Indicator / Low battery warning signal.
13. Multi-point Calibration.
14. Mini jumper to prevent end-user calibration.
15. Optional White LED / Three-color backlight.
16. Built-in rechargeable battery operated.
17. Battery operating time: 300 hours plus after charged.
18. All Stainless Steel Housing
19. Standard Wind Shield for 300g and 600g Capacities.

2. SPECIFICATION

2.1 SYSTEM BLOCK DIAGRAM

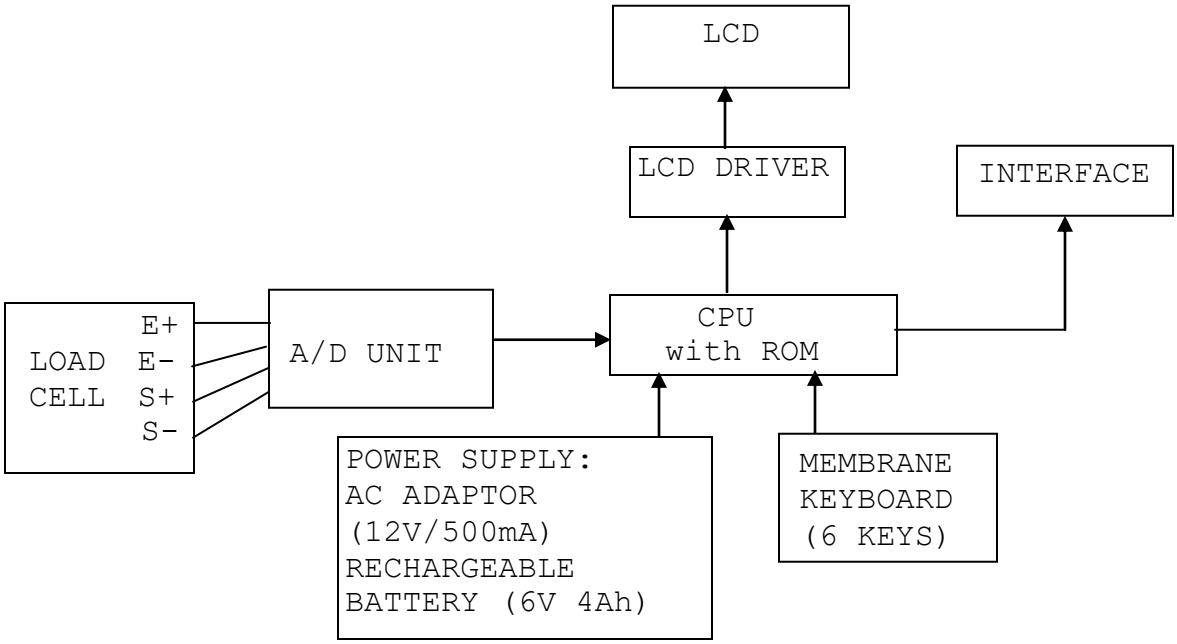

Description:
When a mass is placed on the platform, the load of the article is applied to the load cell inside it.

The resistance to the excitation current in the strain gauge will then changed and the analog output signal varies.

It is amplified and digitized continuously by the A/D converter into a digital signal. Subsequently, the resulting count is processed and managed by the CPU. The CPU refers to the instructions from the keyboard, and then conveys the output data to LCD driver, which formats the data into readout on the display panels.

2.2 PHYSICAL LAYOUT OF ELECTRICAL CONNECTION

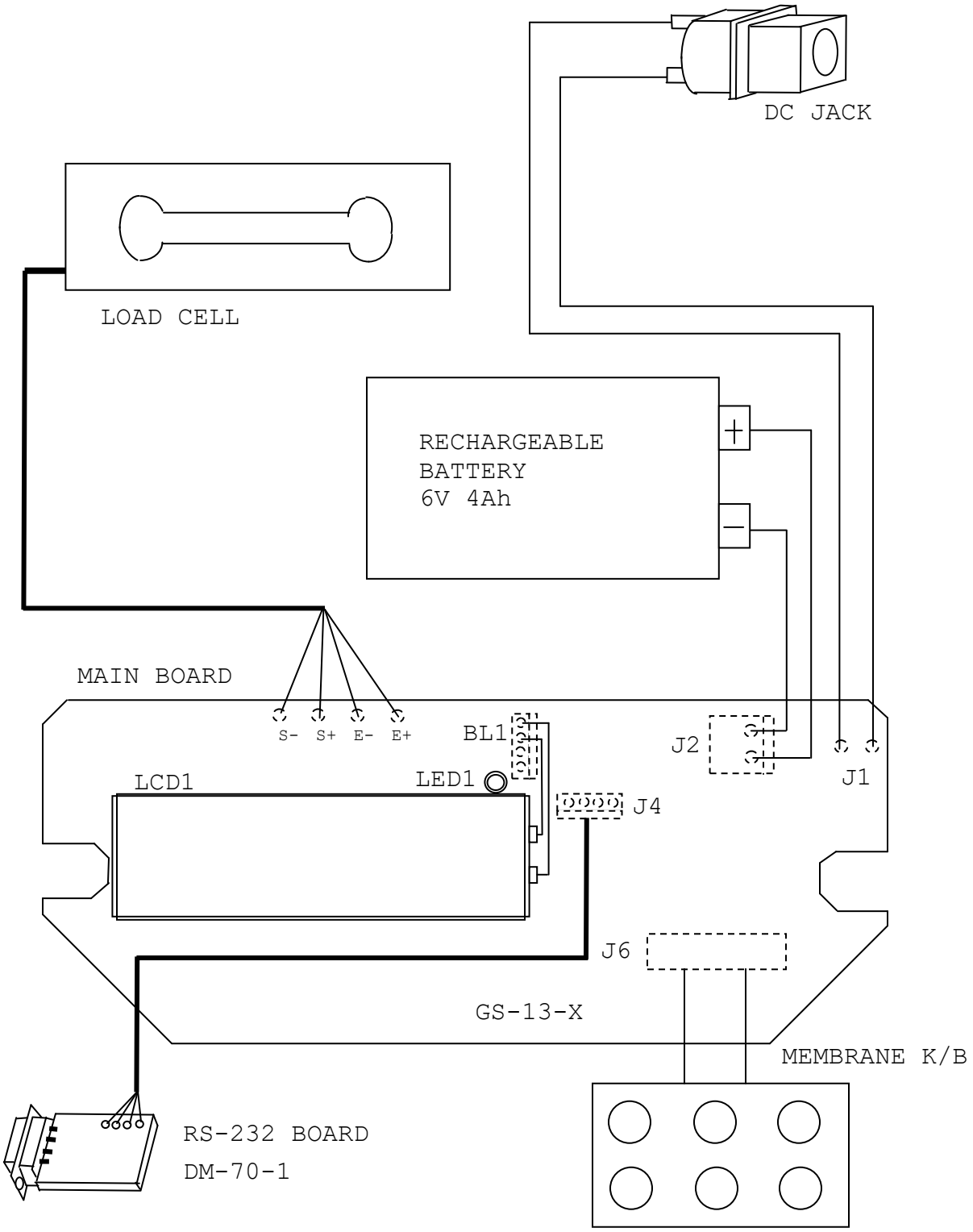

2.3 GENERAL SPECIFICATION

2.3.1 Overall View

300g & 600g

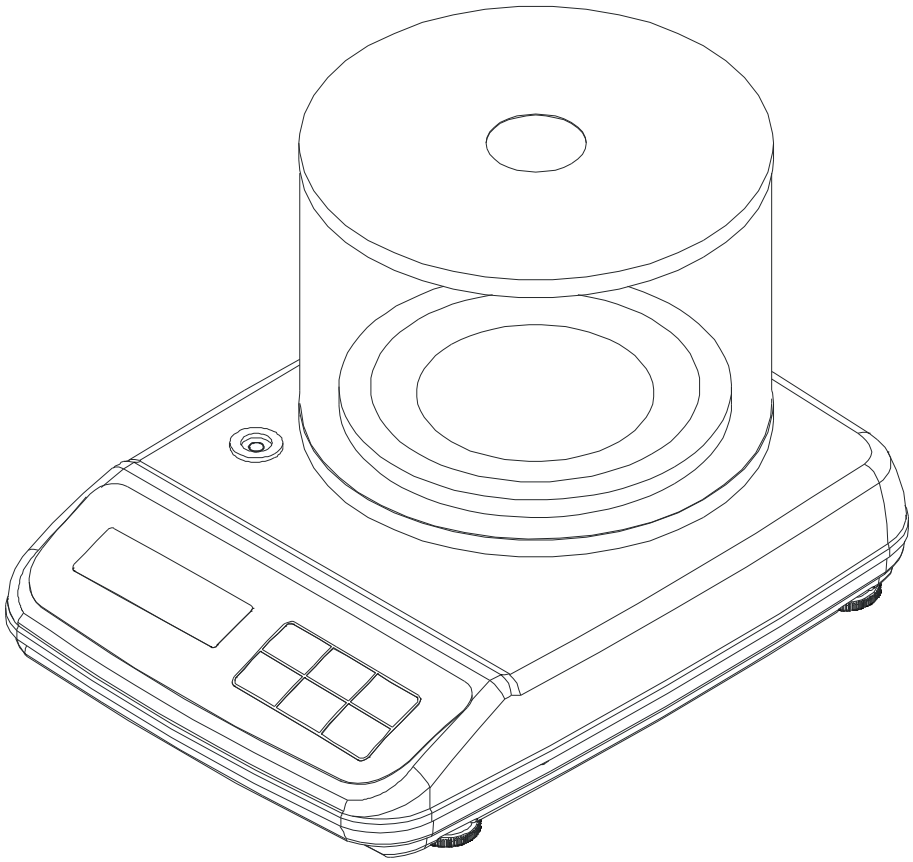

Pan size：Ø150mm
Overall size：230(W) X 310(D) X 74(H) mm

1.2kg ~ 30kg

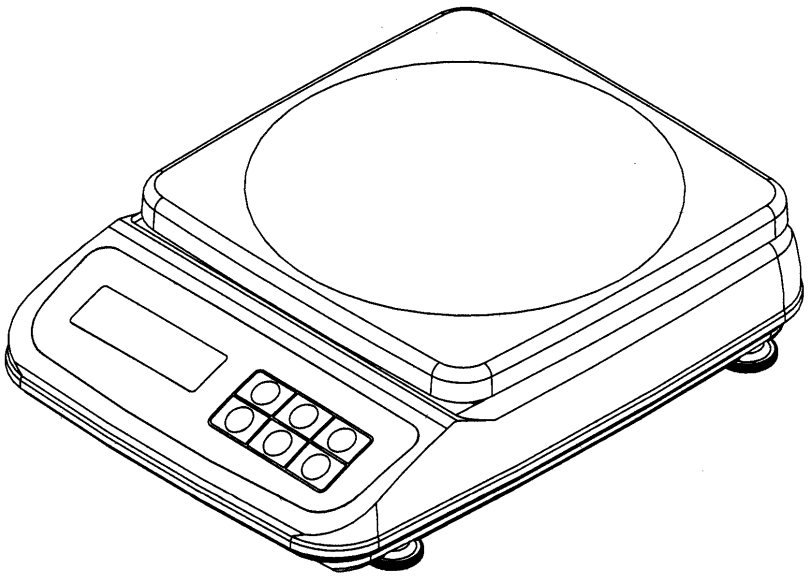

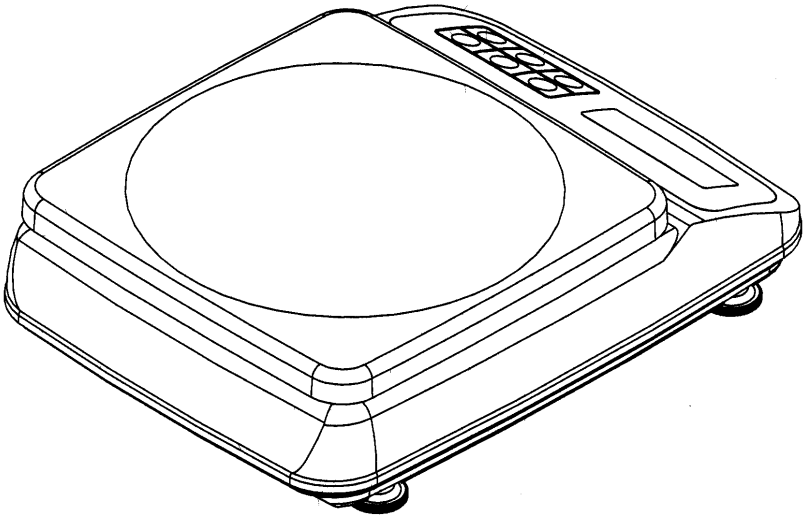

Platter size：210 x 210mm
Overall size：230(W) X 310(D) X 74(H) mm

2.3.2 Model Specifications

Model Number	Capacity (Max)	Division (e)	
		NTEP	Normal
AGS/VGS-300	150/300g	0.05/0.1g	0.01g
AGS/VGS-600	300/600g	0.1/0.2g	0.02g
AGS/VGS-1500	600/1500g	0.2/0.5g	0.05g
AGS/VGS-3000	3000g	0.5g	0.1g
AGS/VGS-6000	6000g	1g	0.2g
AGS/VGS-15K	12000g	2g	0.5g
AGS/VGS-30K	30kg	0.005kg	0.001kg
Approval Class	III		
Tare Range	- Max		
Power on Zero Range	±10% Max		
Manual Zero Range	±2% Max		
Min. Load	20e		
Operation Environment	-0°~40°C (32°~104°F), Non-condensed. R.H.≦85%		
Power Consumption	<0.1W (when not charged)		

2.3.3 Main Components Used

Microprocessors: NUVOTON Nano103LD3AE, Cortex-M0 core, 32-bit
Crystal Oscillator: Built-in 12/16MHz
Display Device: WTN Liquid Crystal Display
Load Cell Capacity: AGS/VGS-300= 300 g
AGS/VGS-600= 600 g
AGS/VGS-1500= 3 kg
AGS/VGS-3000= 5 or 6 kg
AGS/VGS-6000= 7 or 10 kg
AGS/VGS-15K = 20 kg
AGS/VGS-30K = 35 kg

2.3.4 Analog Specification

- The maximum number of verification scale intervals will be: n ≤ 6000 for class (III) instruments
- Power supply of 3.3 V DC;
- 24 bits serial digital output;
- Excitation power supply for the load cell is 3.3 V DC;
- Input impedance of the load cell is 350~420 Ω;
- .

2.4 INTERNAL SETTINGS AND CALIBRATION METHODS

2.4.1 INTERNAL FUNCTION TABLE

Function	Symbol	Description
0	F0	Compulsory zero display(This function will not appear under NTEP(LEGAL) type)
1	F1	Span value reading
2	F2	Full display segment check
3	F3	Scale configuration
4	F4	Auto power off and ECO-mode setting
5	F5	RS-232 baud rate & protocol
6	F6	Motion filter speed setting(0~7)
7	F7	RS-232 transmission mode
8	F8	UTP Printer setting
9	F9	Auto tare function setting
10	F10	Enable/disable absolute zero-point utilization
11	F11	Enable/disable accumulation when pressing M+
13	F13	Copies of UTP label printing (only available when choosing UTP ON in F.8)
14	F14	Enable/disable total printing when pressing MC (only available when choosing UTP ON in F.8)
15	F15	UTP date/time setting (only available when choosing UTP ON in F.8)
16	F16	Buzzer beep mode setting
18	F18	UART address setting
19	F19	EC verification(For qualified personnel only)
20	F20	Gravity Compensation-place of calibration
21	F21	Gravity Compensation-place to be used

HOW TO ENTER THE REQUIRED FUNCTION MODE

a. Turn scale off.
b. Press and hold TARE, then turn scale on. Scale display F1
c. Press TARE until the required function number appears.
d. Press MODE
e. Press MODE until the required setting appears.
f. Press TARE to confirm.
g. Repeat step c to f for other function setting, or
h. Press ON/ZERO to save settings and return to normal operation.

Note:
The **Cal-jumper** is used to control calibration and internal functions setting(F0,F3 ,F19, F20, F21), install this jumper to disable calibration and internal functions setting.

F.0 COMPULSORY ZERO DISPLAY

This function is only visible when **norm** is selected in **F3** (Default=0.25d)

A zero weight value will be displayed on the LCD if the load detected is within the below range.

Symbol	**Zero Value Display Range**
2Ero_0	Disable (Normal display)
2Ero_1	±1e
2Ero_2	±1.5e
2Ero_3	±2e
2Ero_4	±2.5e

F.1 SPAN VALUE READING

a. Simply enter F1 to read the A/D counts.
b. Press ZERO to clear the A/D counts, apply test mass onto platter, the span value of test mass will be displayed.

F.2 FULL DISPLAY SEGMENT CHECK

When function is entered, all segments will be displayed. Check and make sure that no segments are missed.

F.3 SCALE CONFIGURATION

TO SET TYPE (Select between LEGAL, LEGAL CA(for CANADA) and NORMAL application)

a. Enter **F3**,
b. Scale displays **TYPE**
c. Press **M+** to select the operating type between **LEGAL, LEGAL CA**(for CANADA) or **norL** for non-NTEP
d. Press **MODE** to confirm

TO SELECT SCALE CAPACITY

e. Press **M+** to select the capacity, for **LEGAL** and **LEGAL CA** type, there are 1/3000 and 1/6000 display resolutions can be choosed.
   eg. scale displays **"3001" → 3000g x 1g**
   scale displays **"3000.5" → 3000g x 0.5g**
   for **NORMAL,** there are 1/30000 and 1/60000 display resolutions can be choosed.
   eg. scale displays **"3000.1" → 3000g x 0.1g**
   scale displays **"3000.05" → 3000g x 0.05g**
f. Press **MODE** to confirm

TO SET DOMINANT WEIGHING UNIT

g. After scale capacity is selected, scale will display **C unit**

h. Press **M+** to select the dominant weighing unit of kg or lb
   - -To enable "**kg**" as the dominant weighing unit(kg unit calibration), press **M+** when the "C Unit kg" sign appears.
   - -To enable "**lb**" as the dominant weighing unit(lb unit calibration),press **MODE** when the "C Unit lb" sign appears.

TO SET SINGLE OR DUAL INTERVAL

i. After dominant weighing unit is selected, scale will display **intEr**

j. Press **M+** to select Single Interval or Dual Interval
   - -To enable single interval, press **MODE** when the "**SinGE**" sign appears.
   - -To enable dual interval, press **MODE** when the "**dUAL**" sign appears.

TO ENABLE/DISABLE AUXILIARY WEIGHING UNITS

k. There are 12 different weighing unit can be set

l. Press **M+** to shift between the different weighing units available

m. Press **MR** to turn on or off the selected units

n. Repeat step l to step m for all the other weighing units

o. Press **MODE** to confirm

TO SET POWER ON ZERO RANGE(only available when choosing **NORMAL** type)

p. After auxiliary weighing units are set, scale will display **in.=XX**(Power on Zero Range), press M+ until required setting appears.
   In.=02(±2% of full capacity) → In.=05 → In.=10 →In.=15 → In.=20 → In.=30 → In.=40 → In.=02……

q. After power on zero range is selected, press **MODE** to confirm.

F.4 <u>AUTO POWER OFF AND ECO-MODE SETTING</u>

a. After auxiliary weighing unit is selected, scale will display **XoFF**--(Auto power off setting)

b. Press **MODE** to shift between five modes available: (Default=5_OFF)
   0._OFF = Auto Power Off function is disabled.
   5._OFF = Scale will automatically be turned off after 5 minutes unused.
   10._OFF = Scale will automatically be turned off after 10 minutes unused.

20._OFF = Scale will automatically be turned off after 20 minutes unused.

30._OFF = Scale will automatically be turned off after 30 minutes unused.

c. Press **M+** to enter the ECO-mode setting, scale will display **ECo X**

d. Press **MODE** to select ECO ON or ECO OFF

-To enable ECO-mode, press **M+** when the **"ECo ON"** sign appears.

-To disable ECO-mode, press **M+** when the **"ECo OFF"** sign appears.

F.5 RS-232 BAUD RATE & PROTOCOL

a. Press **MODE** to select baud rate of **4800, 9600, 19200** and **38400**

b. Press **M+** to enter transmission protocol selection and press **MODE** to select **P=n81** or **P=E71**

c. Press **M+** to save setting and go to next function

Note: The default value is:

Baud Rate :9600
DATA BIT :8
PARITY BIT :N(NONE)
STOP BIT :1
CODE :ASCII

F.6 MOTION FILTER SPEED SETTING

Motion filter is used to give a more stable display when the working environment is affected by motion or airflow interference. Refer to the below table for motion filter speed setting

FiLt.X	Motion Filter Strength	Response Speed	Environment Interference Stability
0	NO	QUICK	BAD
1	WEAK		
2			
3	⬆	⬆	⬆
4			
5	⬇	⬇	⬇
6			
7	STRONG	SLOW	EXCELLENT

a. Press **MODE** to select **FiLt.0** to **FiLt.7**

-To disable the **MOTION FILTER FUNCTION** select "**FiLt.0**"

-To employ the **MOTION FILTER FUNCTION** select "**FiLt.1**"~"**FiLt.7**"

b. Press **TARE** to save setting and go to next function

F.7 RS-232 TRANSMISSION MODE

a. Press **MODE** to select RS-232 transmission mode of **Conti**, **Auto**, **P_Out**, **CMd** or **OFF**.

-When selects **Conti**, scale will transmit data continuously when reading is stable

-When selects **Auto**, scale will transmit data once when reading is stable

-When selects **P_out**, indicator will transmit data once when pressing **M+**

-When selects **CMd**, scale will transmit data upon receiving commands from PC

Command list:

1. "Q" command→ Command to request current weighing data

PC→

Q	CR	LF

SCALE→

	S	W	W	W	.	W	W		U	U	CR	LF

Space Space

Space : 〝 〞 (20h)

S(sign) : this digit remains space(〝 〞) if there is a positive weight data, otherwise, S will be as minus(〝-〞).

WWW.WW : weight data(6 digits, including decimal point)

UU : weight unit(g, kg, lb)

2. "Z" command→ Command to set weight displayed to zero

PC→

Z	CR	LF

(Scale executes the ZERO function as like pressing a "ZERO" key)

SCALE→

Z	CR	LF

(scale sends command back for acknowledgement)

3. "T" command→ Command to tare off the weight of container

PC→

T	CR	LF

(Scale executes the TARE function as like pressing a "TARE" key)

SCALE→ | T | CR | LF | (scale sends command back for acknowledgement)

4. Scale will reply "I" If weighing is unstable when receiving commands from PC.

SCALE→ | I | CR | LF |

5. Scale will reply "?" If commands received is unknown for the scale.

SCALE→ | ? | CR | LF |

-When selects **OFF**, scale will not transmit data anymore.

b. Press **TARE** to save setting and go to next function

F.8 UTP PRINTER SETTING

a. Press **MODE** to enter the UTP printer setting, scale will display **UTP**

b. Press **M+** to select UTP ON or UTP OFF
   -To enable UTP printer, press **MODE** when the **"UtPon"** sign appears.
   -To disable UTP printer, press **MODE** when the **"UtPoF"** sign appears.

c. If choose **UtPon** in **step b**, there will have several printer data formats can be set.
   After pressing **MODE**, scale displays previous setting(Prnt1, Prnt2 or Form0~Form9)
   Press **M+** until the required setting appears.
   -When **Prnt1** is selected, scale will print data in a table format with number of entries and total weight
   -When **Prnt2** is selected, scale will print single data with simple format.
   -When **Form0~Form9** is selected, scale will employ desired label format that has stored in UTP printer by it's communication protocol.

d. Press **MODE** to enter printout mode

e. Press **M+** to select **Auto** or **nAuto**(non-auto)
   -When selects **Auto**, scale will print data once when reading is stable

-When selects **nAuto,** scale will print data once when pressing **M+**

f. Press **MODE** to save setting and go to next function

F.9 AUTO TARE FUNCTION SETTING

a. Press **MODE** to select **TroFF** or **Tr_on**

-**TroFF** will disable the auto tare off function

-**Tr_on** will enable the auto tare function and tare off the first weight that is placed on the scale

b. Press **TARE** to save setting and go to next function

F.10 ENABLE/DISABLE ABSOLUTE ZERO-POINT UTILIZATION

a. Press **MODE** to select **AC_on** or **ACoFF**

-**AC_on** will enable absolute zero-point utilization (use original calibrated zero-point as power on zero-point)

-**ACoFF** will disable absolute zero-point utilization (indicator will be zeroed automatically while power on)

b. Press **TARE** to save setting and go to next function

F.11 ENABLE/DISABLE ACCUMULATION WHEN PRESSING M+

a. Press **MODE** to select **Ad_on** or **AdoFF**

-**Ad_on** will enable accumulation function when pressing **M+** (Also prints data via RS-232 and printer)

-**AdoFF** will disable accumulation function when pressing **M+** (Press **M+** to print data only, M+ & MR & MC will be no function)

b. Press **TARE** to save setting and go to next function

F.13 COPIES OF UTP LABEL PRINTING(only available when choosing UTP in **F8**)

a. Press **MODE** to select copies of UTP printing(Copy1~copy9)
Copy X：quantity of copies

b. Press **TARE** to save setting and go to next function

F.14 ENABLE/DISABLE TOTAL PRINTING WHEN PRESSING MC(only available when choosing UTP in **F8**)

a. Press **MODE** to select **tt_on** or **ttoFF**

-**tt_on** will enable total printing when pressing **MC**
(F11 must set "Ad_on" in advance)

-**ttoFF** will disable total printing when pressing **MC**

b. Press **TARE** to save setting and go to next function

F.15 **UTP DATE/TIME SETTING**(only available when choosing UTP in **F8**)

It must be a UTP printer installed and connected to scale Properly when trying to set up UTP's date/time data.

a. Enter **F15**, press **MODE** to show present year data(year:y=xx, e.g. Year of 2008 → y=08).
b. Enter correct year data by utilizing **M+**(move cursor) and **MR**(increase value) keys.
c. Press **MODE** to save setting, then scale displays present month data(month:m=xx).
d. Repeat **step b to c** for month(m=xx)/day(d=xx)/hour(H=xx) /minute(m=xx) data setting.

F.16 **BUZZER BEEP MODE SETTING**

a. Press **MODE** to shift between five modes available:
bZoFF → Disable Beep Function
bZ oK → Making beep sound when weight is between LO & HI LIMIT
bZ HL → Making beep sound when weight isn't between LO & HI
bZ H → Making beep sound when weight is higher than HIGH LIMIT
bZ L → Making beep sound when weight is lower than LOW LIMIT
b. Press **TARE** to save setting and go to next function

F.18 **UART ADDRESS SETTING**

a. Enter **F.18**, scale will display **iP XX**
b. Assign a desired UART addres to this scale by utilizing **MR**(move cursor) and **M+**(increase value) keys.
Adr.=00 → No address needed when communicates with PC
Adr.=XX → Assign a unique UART address for the scale.(XX = 01~99)
The scale with designated address will respond only when receiving command that bearing address from PC.
c. Press **TARE** to save setting and go to next function

F.19 **EC verification(For qualified personnel only)**

This function can only be used under verification stage. When executing F19, the displayed scale interval(**d**) will be 1/10 Of verification scale interval(**e**).(eg. e=0.1g, d=0.01g)

F.20 **GRAVITY COMPENSATION-PLACE OF CALIBRATION (C.G.)**

This function stores the gravity value of where the scale is manufactured. indicator was calibrated according to the value stored.

a. Press **MODE** to enter and utilize **M+** to increase value, **MR** to move cursor to the next digit
b. Press **TARE** to save setting and go to next function

F.21 GRAVITY COMPENSATION-PLACE TO BE USED (U.G.)

This function stores the gravity value of where the indicator will be used. The value stored in F.21 will be used to compare with the value in F.20 to compensate the difference in gravity value.

a. Press **MODE** to enter and utilize **M+** to increase value, **MR** to move cursor to the next digit
b. Press **TARE** to save setting and go to next function

2.4.2 CALIBRATION METHODS

DEALER CALIBRATION

a. Turn scale off.
b. Press and hold **TARE**, then turn scale on.
c. Scale displays **F1**
d. Press **MODE**
e. Scale displays offset value
f. Press and hold **MODE**, Scale displays **CAL.1.**
g. Press **MODE**, Scale displays **YES.**
h. Scale will self calibrate zero point before proceed to the first point calibration.
i. After zero point calibration is done, scale displays LOAD → XXXX
j. Load calibration load as request.
k. Wait until scale displays **CAL.2**
l. Press **ON/ZERO** to abandon second point calibration or
m. Press **MODE**, scale displays LOAD → XXXX(second point).
n. Load calibration load as request
o. Wait until scale displays **CAL.3**
p. Press **ON/ZERO** to abandon third point calibration or
q. Press **MODE**, scale displays LOAD → XXXX(third point).
r. Load calibration load as request, wait until scale displays **done.**
s. Calibration completed and scale is ready for operation.

AUTO CALIBRATION

a. Turn scale off
b. Press and hold **MODE**, then turn scale on.
c. Scale displays **CAL.1**
d. Press **MODE** for **YES** and scale will self calibrate zero point before proceed to the first point calibration
e. Load the mass according to the display, normally the first point is 1/3 of the full capacity
f. If loaded weight is accepted, The reading will flash for seconds, after first point calibration completed, scale displays **CAL.2**
g. Press **MODE** for **YES**, load the mass according to the display, normally

the second point is 2/3 the full capacity

h. If loaded weight is accepted, The reading will flash for seconds, after second point calibration completed, scale displays **CAL.3**
i. Press **MODE** for **YES**, load the mass according to the display, normally the third point is the full capacity
j. The reading will flash for seconds and displays **donE**
k. Scale will start counting down and ready to use

3. TROUBLE SHOOTING

3.1 TROUBLE SHOOTING LOOP

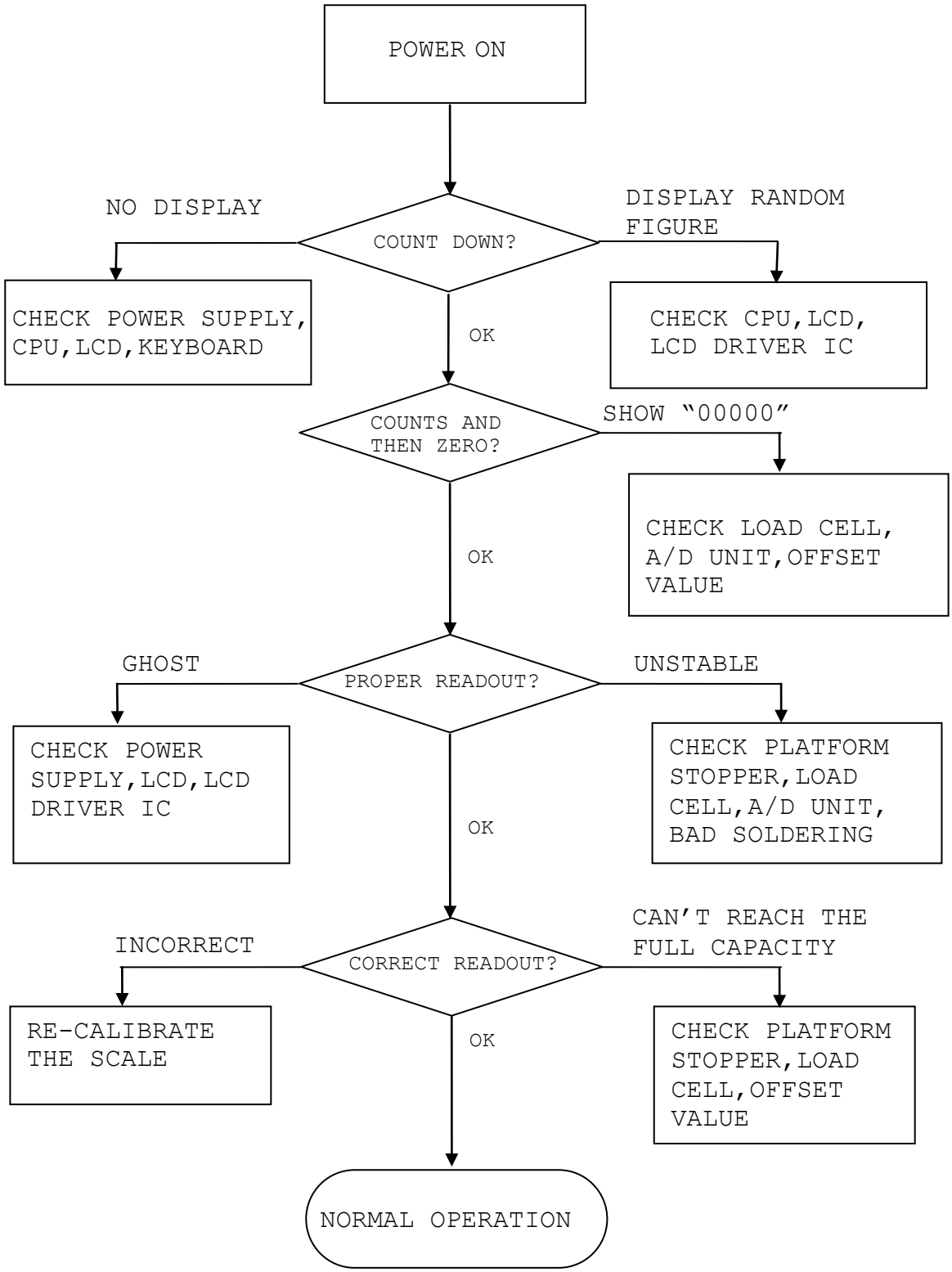

3.2 PARTS AND COMPONENTS TROUBLE SHOOTING

3.2.1 Power Supply Checking

3.2.1.1 Relevant parts:

Main Board (GS-13-X)
Q1 (C1061 or D880, TO-220)
Q3 (CMPT2222, SOT23)
R1 (1.2R 1W)
ZR1(ZENER 8.2V 1W)
DC JACK
BATTERY(6V 4Ah)
Q2 (CMPT2907, SOT23)
Q5 (CMPT2222, SOT23)
Q4 (CMPT2907, SOT23)
U1(AIC 1734-3.3, SOT89)

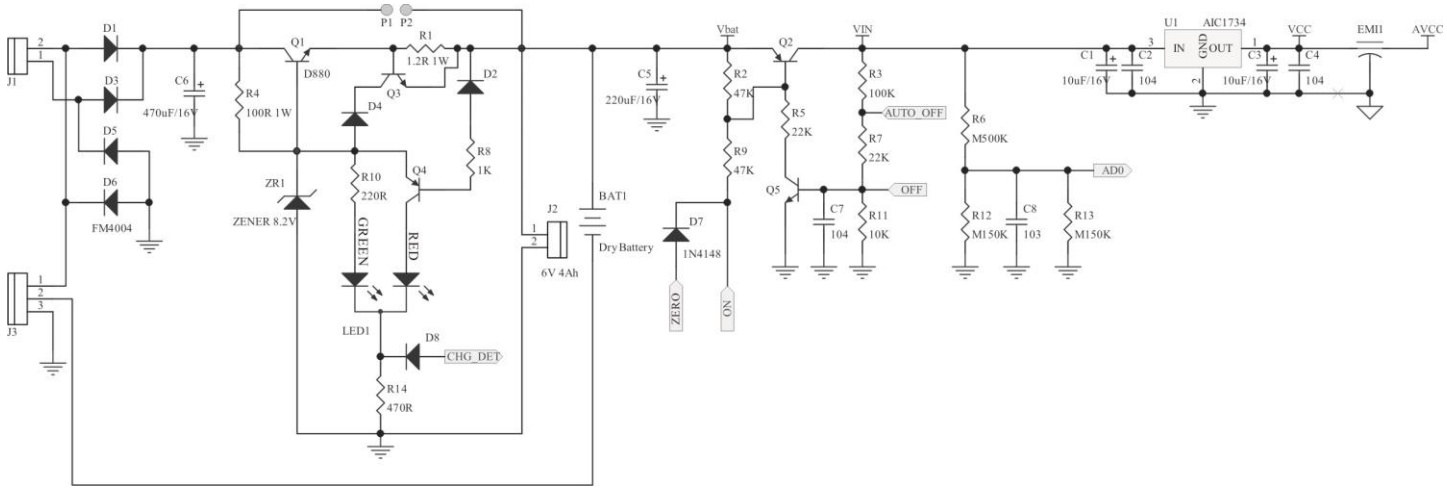

Description:

1) Power source: Rechargeable Battery 6V/4Ah or AC adaptor(12V, 500mA)

2) How Battery is charged completely?
   The charging voltage is regulated by Q1 (C1061) and ZR1 (8.2V) for about 7 volts.
   The charging current will go down automatically when voltage reached.
   Q3 (CMPT2222) and R1(1.2R, 1W) provide Over-Current protection.

3) +5V power drives digital & analog circuit system.
   U1 (AIC 1734-3.3) is a 5volts Voltage Regulator.

4) Auto-off:
If the scale is set with auto power-off function(F.4) or even under LO-BAT situation, after fixed time interval, CPU will release a low potential signal to draw Q5 down, then Q2 cuts off, the scale will be shut down immediately.

5) Low Power Detection:
The R6(500K ohm, Metal-film)and R12(150K ohm, Metal-film) are designed to detect the power level. The AD0(input of ADC) can measure the battery power level. When battery power is less than 5.5V, then CPU will instruct LCD display to show LO-BAT symbol.

3.2.1.2 Input voltage: 5.5V or higher
Check and recharge battery if voltage is less than 5.5V.

3.2.1.3 System voltage (Vcc): 3.3V +/- 10%
Check that the system voltage is within 3.3V +/- 10%
a) less than 1.8V, the CPU may not work properly.
b) more than 5.5V, ghost will appear on LCD.

3.2.2 Platform Stopper Checking
The platform device shall not touch anything around itself during operation. Check that the platform is not contacted with the upper (no load) and/or lower (with load) stopper.

3.2.3 LCD Display Checking

3.2.3.1 Check that it is soldered and connected properly between LCD and driver IC (HT16C22), driver IC (HT16C22) and CPU.

3.2.3.2 Check whether LCD is broken.

3.2.4 CPU Checking

3.2.4.1 Check that all pins are soldered properly onto the solder pads.

3.2.4.2 Check that the internal Crystal Oscillator works.

3.2.4.3 Check the RESET is normally high.

3.2.5 A/D Unit Checking

3.2.5.1 Check that the +3.3V powers are correctly fed to the A/D unit.

3.2.5.2 Check that the signal output of loadcell is normal.

3.2.5.3 Check A/D Converter (AD7780).

When no error is found with the above checking procedures, the trouble can be caused on the loadcell or the PCB itself. Replace a new one could be better to identify the defective.
In this way, the readout of weight would be varied because of the output voltage of loadcell and different span value, so re-calibration is required after this replacement.

4. ELECTRICAL CIRCUITRY

4.1 SCHEMATICS

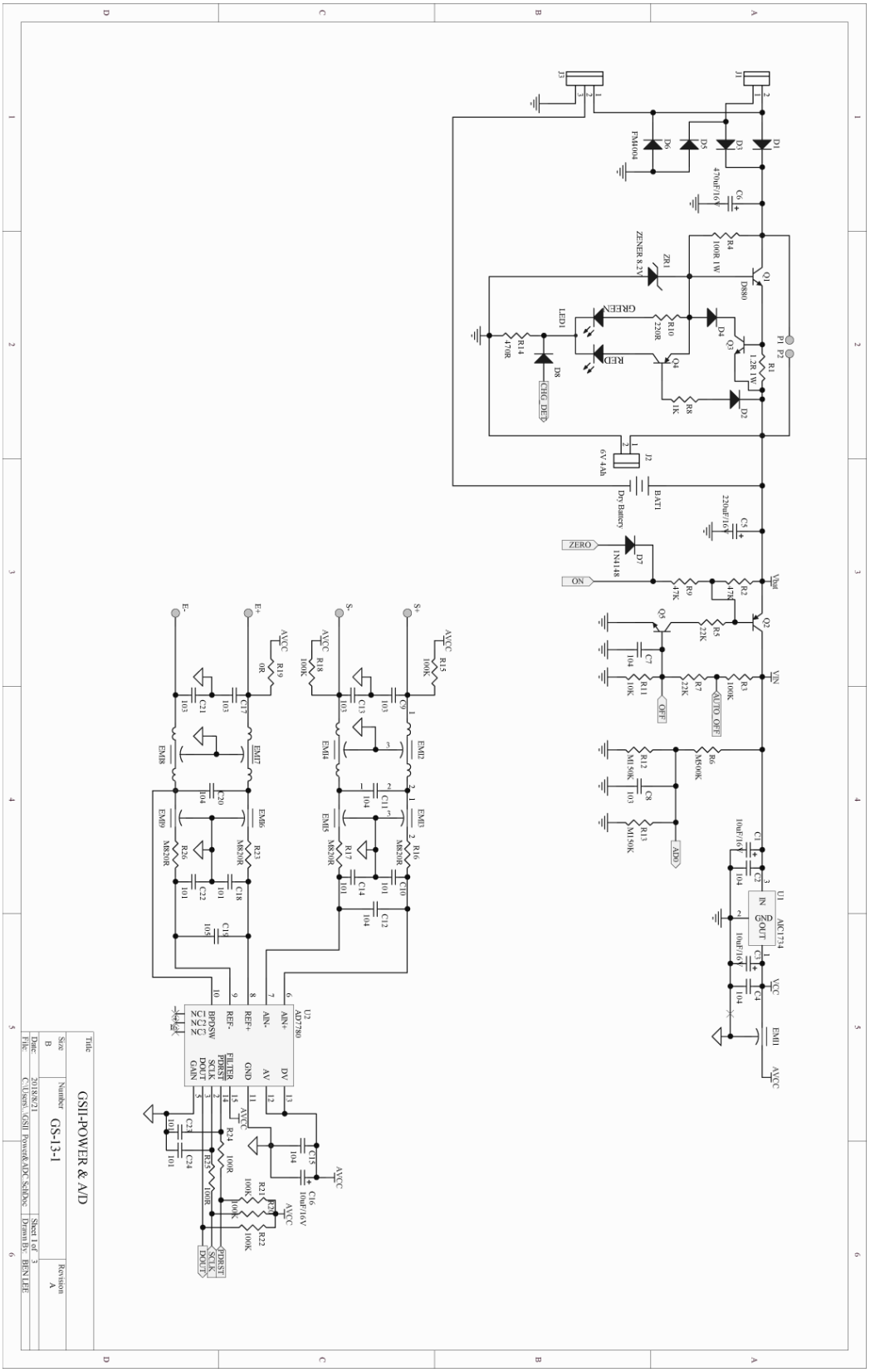

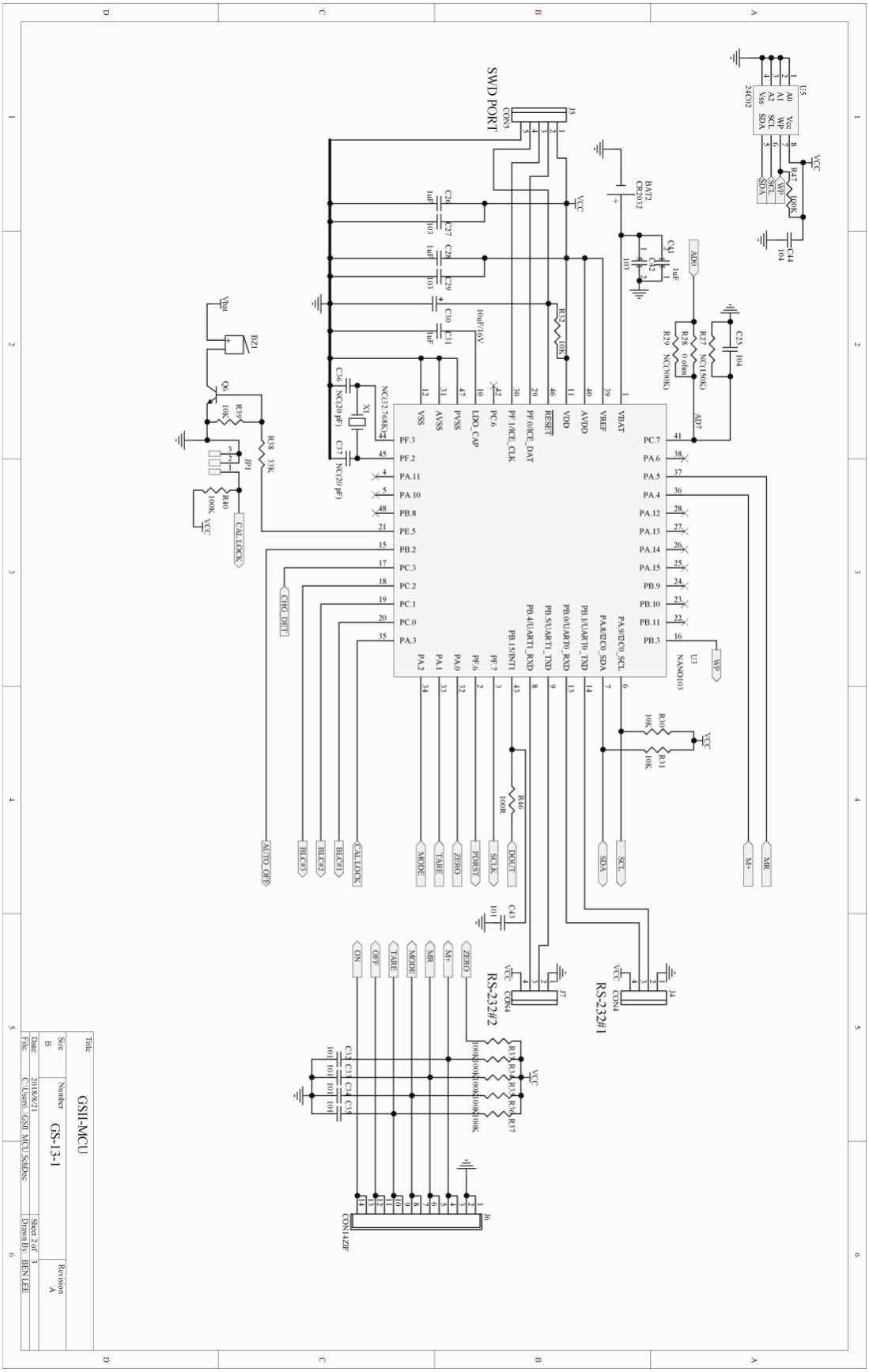
U5
24C02
A0
A1
A2
Vss
Vcc
WP
SCL
SDA
R47
100K
C44
104
VCC
SWD PORT
J5
CON5
BAT2
CR2032
C41
1uF
C42
103
ADO
R27
NC(150K)
R28
0 ohm
R29
NC(300K)
C25
104
AD7
C20
1uF
C27
103
C28
1uF
C29
103
C30
10uF/16V
C31
1uF
R32
10K
VBAT
VREF
VDD
AVDD
RESET
PF.0/ICE_DAT
PF.1/ICE_CLK
PC.6
LDO_CAP
PVSS
AVSS
VSS
PF.3
PF.2
PA.11
PA.10
PB.8
PE.5
PB.2
PC.3
PC.2
PC.1
PC.0
PA.3
PA.2
PA.1
PA.0
PF.6
PF.7
PB.15/INT1
PB.4/UART1_RXD
PB.5/UART1_TXD
PB.6/UART0_RXD
PB.1/UART0_TXD
PA.8/I2C0_SDA
PA.9/I2C0_SCL
PB.3
PB.11
PB.10
PB.9
PA.15
PA.14
PA.13
PA.12
PA.4
PA.5
PA.6
PC.7
U3
NANO103
WP
R30
10K
R31
10K
VCC
SDA
SCL
M+
MR
R46
100R
DOUT
SCLK
PDRST
ZERO
TARE
MODE
CALLOCK
BLC#1
BLC#2
BLC#3
CHG_DET
AUTO_OFF
C36
NC(20 pF)
C37
NC(20 pF)
X1
NC(32.768K)
BZ1
Q6
R39
10K
R38
33K
JP1
R40
100K
CALLOCK
C43
101
J7
CON4
RS-232#2
J4
CON4
RS-232#1
R33
R34
R35
R36
R37
100K
C32
C33
C34
C35
101
ON
OFF
TARE
MODE
MR
M+
ZERO
J6
CON14ZIF
Title
GSII-MCU
Size
B
Number
GS-13-1
Revision
A
Date:
2018/8/21
Sheet 2 of 3
File:
C:\Users\GSII_MCU.SchDoc
Drawn By:
BEN LEE

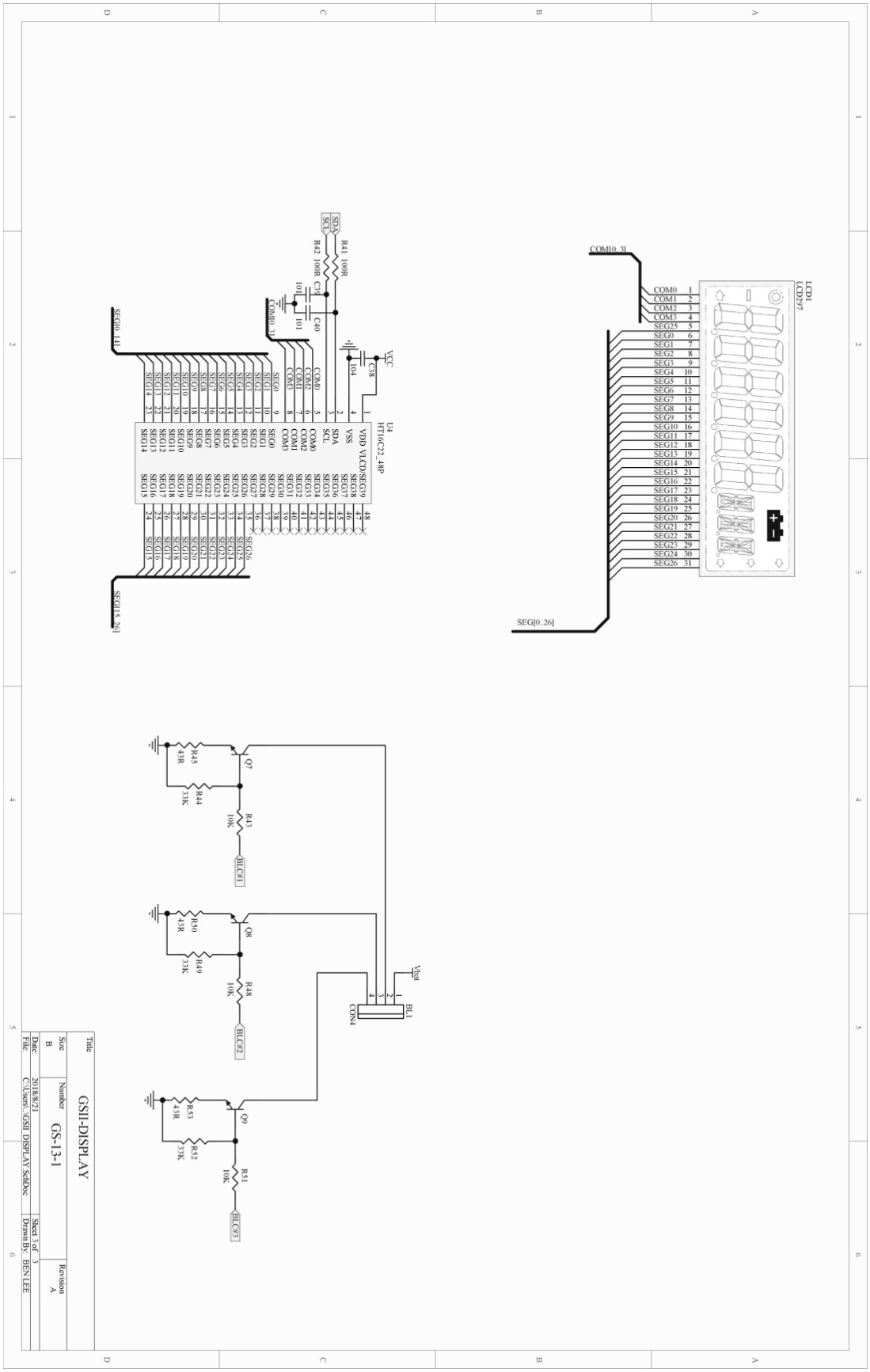
LCD1
LCD297
COM[0..3]
SEG[0..26]
U4
HT16C22_48P
VDD VLCD/SEG30
VSS
SDA
SCL
COM0
COM1
COM2
COM3
SEG[0..14]
SEG[15..26]
VCC
C38
104
R41 100R
R42 100R
C39
C40
101
BL1
CON4
Vbat
Q7
Q8
Q9
R43
R48
R51
10K
R44
R49
R52
33K
R45
R50
R53
43R
BLC#1
BLC#2
BLC#3
Title
GSII-DISPLAY
Size
B
Number
GS-13-1
Revision
A
Date:
2018/8/21
Sheet 3 of 3
File:
C:\Users\...\GSII_DISPLAY.SchDoc
Drawn By:
BEN LEE

4.2 PCB LAYOUT

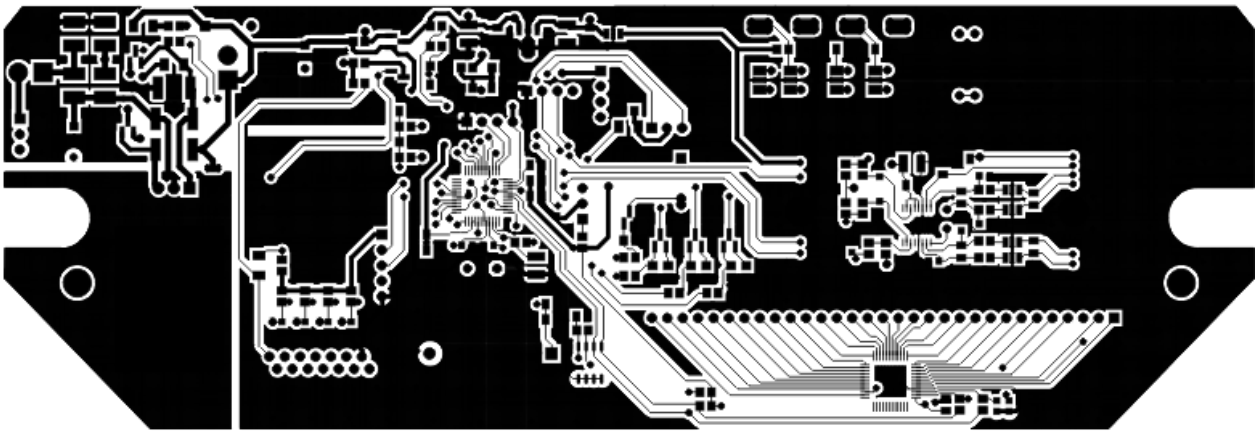

MAINBOARD GS-13-1 TOP LAYER

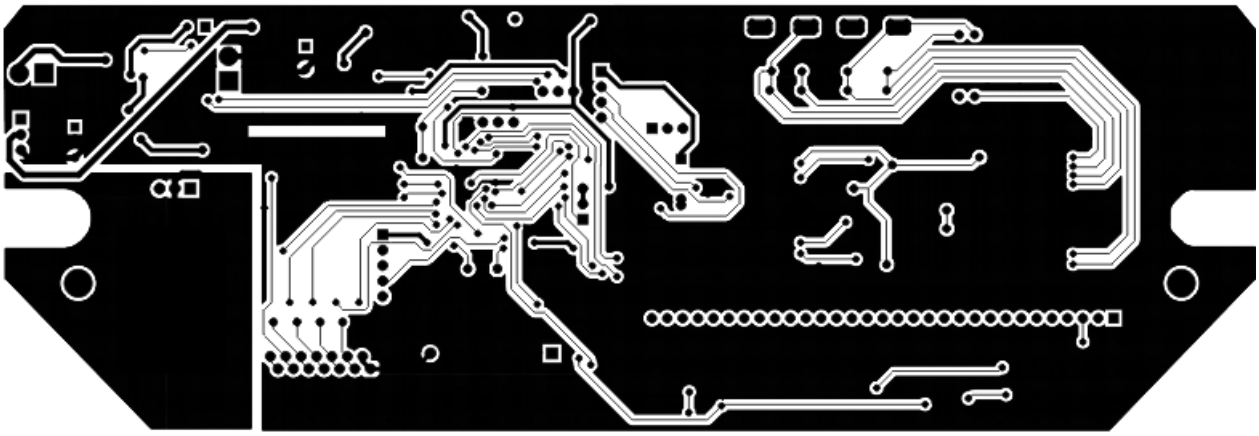

MAINBOARD GS-13-1 BOTTOM LAYER

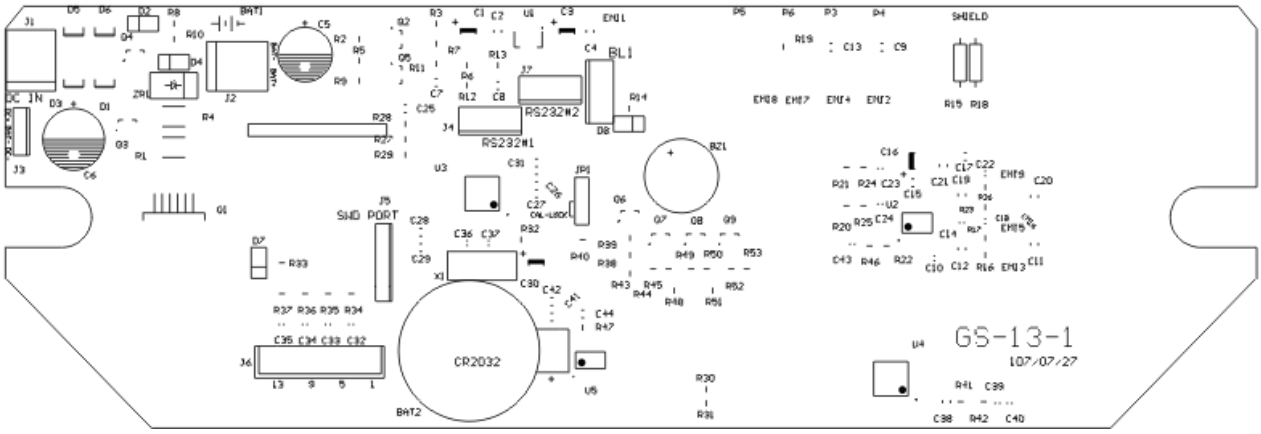

MAINBOARD GS-13-1 TOP OVERLAY

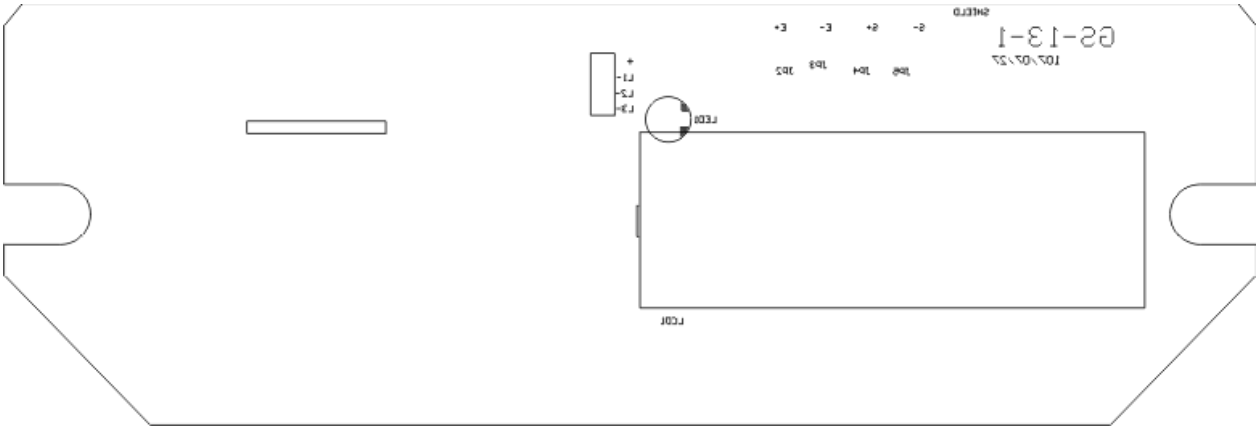

MAINBOARD GS-13-1 BOTTOM OVERLAY

5. BILL OF MATERIAL

STRUCTURE

AHGS-300 & AHGS-600

Parts No.	Description	Specification	Qty	Remark
E1VGS000010	P.C.B. KIT	GS-13-X MAIN BOARD	1	
A0044000***	LOAD CELL	BCL	1	
	AGS/VGS-300	BCL-300		
	AGS/VGS-600	BCL-600		
A60********	ADAPTOR	AC100~240V/ DC12V 500mA	1	
F0005GS0012	S/S UPPER CABINET	HGS-300 SERIES	1	
F0005GS0100	S/S UNDER CABINET	GS SERIES	1	
F0003GS0100	ALUMINUM L/C SUPPORT(UNDER)	GS-300	1	
G0003JW0000	PLASTIC L/C SUPPORT(UPPER)	JW SERIES	1	
F0002GS0010	S/S PLATTER	GS SERIES(§149*8mm*0.3)	1	
G0002JW0000	PLASTIC PLATTER	DB, NJW SERIES	1	
A5005000090	BUBBLE LEVEL	D14	1	
G0004MP0002	S/S ADJUSTABLE FEET	MS SERIES	4	
G0004GSP000	RUBBER PAD	GSP SERIES, CFR-190603	4	
A1600060400	RECHARGEABLE BATTERY	GP4-6/6V 4Ah	1*	
G0030FS0000	RUBBER PLUG	FOR DC JACK	1	
C1VGS******	OVERLAY	AGS/VGS SERIES	1	
A0906000210	D.C. JACK	SCD-021(BLACK)	1	
A1205010300	BATTERY WIRE	30cm(BLACK)	1	
A1205010302	BATTERY WIRE	30cm(RED)	1	
B0GS0000001	MEMBRANE KEYBOARD	GS SERIES,OIML	1	
F0027GS0000	S/S WIND SHIELD COVER	GS-300 SERIES, §180*8	2	
G0030GS0200	RUBBER SEALING	GS SERIES(RU-§ 165)	1	

AGS/VGS-1.2K~30K

E1VGS000010	P.C.B. KIT	GS-13-X MAIN BOARD	1	
A0002030***	LOAD CELL	PA06 / 1022 /……	1	
	AGS/VGS-1500	3kg		
	AGS/VGS-3000	5 or 6kg		
	AGS/VGS-6000	7 or 10kg		
	AGS/VGS-12K / 15K	20kg		
	AGS/VGS-30K	35kg		
A60********	ADAPTOR	AC 100~240V/DC 12V 500mA	1	
F0005GS0110	S/S UPPER CABINET	GS SERIES	1	
F0005GS0100	S/S UNDER CABINET	GS SERIES	1	
F0003GS0101	ALUMINUM L/C SUPPORT(UNDER)	GS SERIES(1kg ABOVE)	1	
F0003GS0102	ALUMINUM L/C SUPPORT(UPPER)	GS SERIES	1	
F0002GS0000	S/S PLATTER	GS SERIES	1	
A5005000090	BUBBLE LEVEL	D14	1	
G0004MP0002	S/S ADJUSTABLE FEET	MS SERIES	4	
G0004GSP000	RUBBER PAD	GSP SERIES, CFR-190603	8	
A1600060400	RECHARGEABLE BATTERY	GP4-6/6V 4Ah	1	
G0030FS0000	RUBBER PLUG	FOR DC JACK	1	
C1VGS******	OVERLAY	AGS/VGS SERIES	1	
A0906000210	D.C. JACK	SCD-021(BLACK)	1	
A1205010300	BATTERY WIRE	30cm(BLACK)	1	
A1205010302	BATTERY WIRE	30cm(RED)	1	
B0GS0000001	MEMBRANE KEYBOARD	GS SERIES,OIML	1	
G0030GS0100	WATERPROOF FRAME	GS SERIES	1	
G0030GS0200	RUBBER SEALING	GS SERIES(RU-§ 165)	1	

GS-13-X MAINBOARD

E0VGS000010	P.C.B.	GS-13-X	1	
A0102000298	L.C.D.	G297(VTI6016AHSP)	1	LCD1
A0201013030	I.C.	NANO103LD3AE, LQFP48	1	U3
A0203077800	I.C. (SMD)	AD7780BRUZ	1	U2
A0207017343	VOLTAGE REGULATOR I.C.	AIC1734-33CXT(0.3A), SOT-89	1	U1
A0208162248	I.C.	HT16C22-48, LQFP48	1	U4
A0401122220	TRANSISTOR	CMPT2222AE(SOT23,NPN,0.6A)	4	Q3,5,6,7
A0401129070	TRANSISTOR	CMPT2907AE(SOT23,PNP,0.6A)	2	Q2,4
A0401010610	TRANSISTOR	H1061C or D880	1	Q1
A0501004004	DIODE (S.M.D.)	FM4004 (1A,400V),SMA-A4	2	D1,3,5,6
A0501004149	DIODE (S.M.D.)	MM4148 (150mA,75V)	1	D2,4,7,8
A0503020083	ZENER DIODE (S.M.D.)	1W 8V2 SMA ;(ZS4738A)	1	ZR1
A0625050000	L.E.D.	GREEN/RED,ROUND 5mm	1	LED1
A0701477017	CAPACITOR (EC)	470µF/25V (SS TYPE,§10*H12))	1	C6
A0701227017	CAPACITOR (EC)	220µF/16V (SS TYPE)	2	C5
A0772106010	CAPACITOR (TC)	10µF/16V(A Case), 1206	4	C1,3,16,30
A0773103050	CAPACITOR (MLC)	0.01µF/50V(103), 0805	8	C8,9,13,17,21,27,29.42
A0773104050	CAPACITOR (MLC)	0.1µF/50V(104),0805	10	C2,4,7,11,12,15,20,25,38,44
A0773105050	CAPACITOR (MLC)	1µF/25V(105), 0805	5	C19,26,28,31,41
A0774101051	CAPACITOR (CC)	100PF/50V(101), 0603	13	C10,14,18,22-24,32-35,39,40,43
A0814001503	METAL FILM RESISTOR(1%)	150KΩ (25PPM 0805)	2	R12,13
A0814005003	METAL FILM RESISTOR(1%)	500KΩ (25PPM 0805)	1	R6
A0814008200	METAL FILM RESISTOR(1%)	820Ω (25PPM 0805)	4	R16,17,23,26
A0815001000	CARBON FILM RESISTOR(5%)	0Ω (0805)	2	R19,28
A0815001101	CARBON FILM RESISTOR(5%)	100Ω (0805)	5	R24,25,41,42,46
A0815001102	CARBON FILM RESISTOR(5%)	1KΩ (0805)	1	R8
A0815001103	CARBON FILM RESISTOR(5%)	10KΩ (0805)	6	R11,30-32,39,43
A0815001104	CARBON FILM RESISTOR(5%)	100KΩ (0805)	11	R3,20-22,33-37,40,47
A0815001221	CARBON FILM RESISTOR(5%)	220Ω (0805)	1	R10
A0815001223	CARBON FILM RESISTOR(5%)	22KΩ (0805)	2	R5,7
A0815001333	CARBON FILM RESISTOR(5%)	33KΩ (0805)	2	R38,44
A0815001430	CARBON FILM RESISTOR(5%)	43Ω (0805)	1	R45
A0815001471	CARBON FILM RESISTOR(5%)	470Ω (0805)	1	R14
A0815001473	CARBON FILM RESISTOR(5%)	47KΩ (0805)	2	R2,9
A0815100120	CARBON FILM RESISTOR(5%)	1W 1.2Ω (2512)	1	R1
A0815101110	CARBON FILM RESISTOR(5%)	1W 100Ω (2512)	1	R4
A1008000005	EMI FILTER	CNH20R105M-TM(1uF/16V)	5	EMI1,3,5,6,9
A0901010040	CONNECTOR	4 PIN WAFER	1	J4
A0901010050	CONNECTOR	5 PIN WAFER	1	J5
A0910000140	CONNECTOR (ZIF for FPC)	14 PIN 180°,PITCH=1.25	1	J6
A1500000004	BUZZER	OBO-15210	1	BZ1
A5004000002	HEAT SINK	MB-204-20	1	Q1
A0910111020	MINI JUMPER	PITCH 2.54	1	JP1
A0907010030	CONNECTOR	1 * 3 PIN 180°	1	JP1

BACK LIGHT OPTION

A1400008528	LED BACK LIGHT(WHITE)	YMS8528W-01 (85*28*3.3mm)	1	BL1

6. APPENDIX

AGS/VGS-300 & AGS/VGS-600

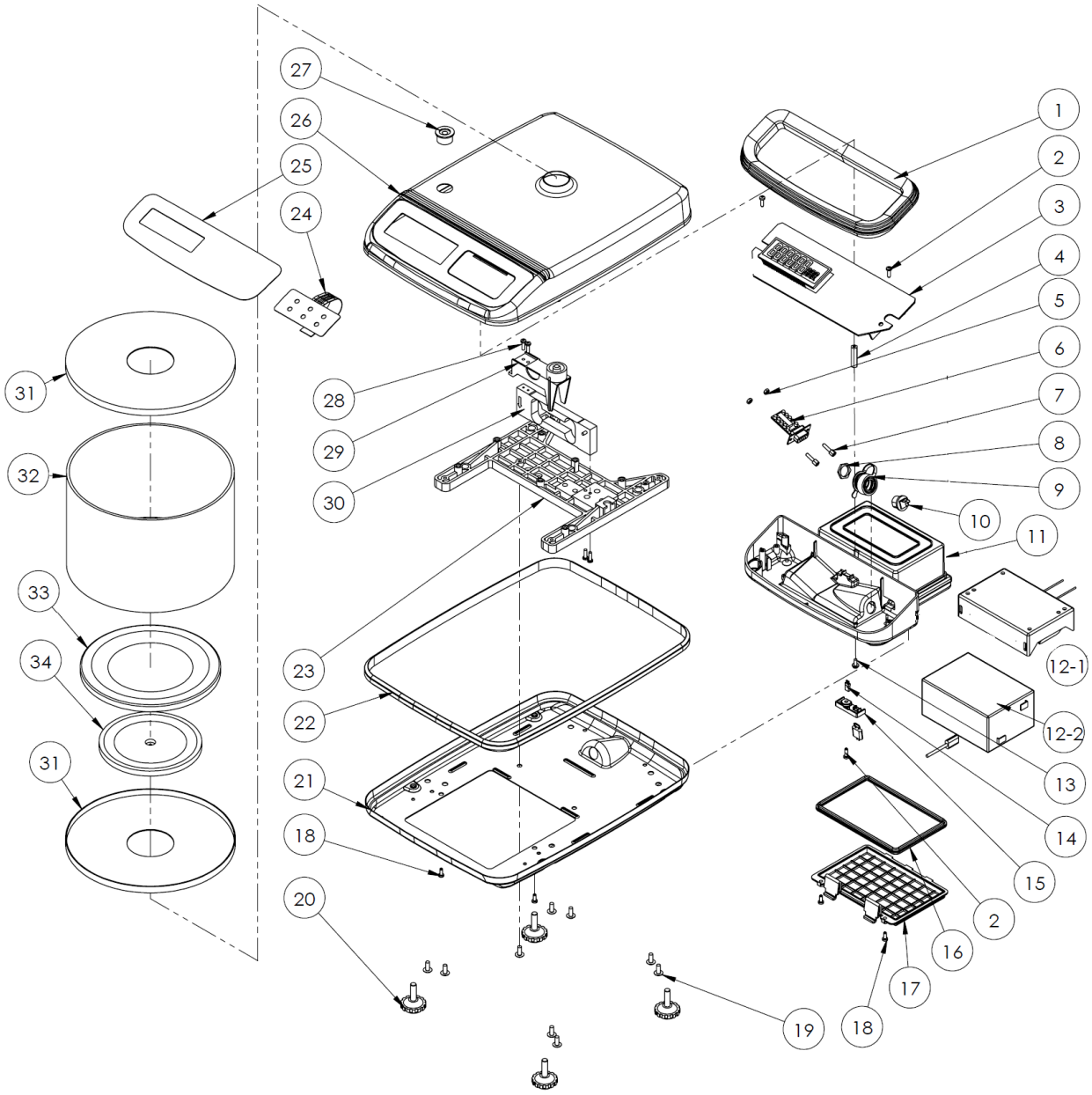

AGS/VGS-300 & AGS/VGS-600

ITEM	QTY	PART NO.	PART NAME	DESCRIPTION
1	1	G0030VGS001	Rubber sealing washer	VGS SERIES,FOR PCB
2		Z001XXXXXXX	SCREW	Ø3*10L
3	1	E1VGS000010	P.C.B. KIT	GS-13-X
5	2	Z001XXXXXXX	NUT	3/8
6	1	E1DM0100000	P.C.B. KIT (RS232)	DM-70-1
7	2	Z001XXXXXXX	SCREW	3/8 *15L
8	1	Z0016100000	NUT	SCD-021
9	1	G0030FS0000	RUBBER PLUG	FS SERIES, FOR DC JACK
10	1	A0906000210	D.C. JACK	SCD-021 (BLACK)
11	1	G0030VGS100	Motherboard housing	VGS SERIES
12-1	1	G0007XM2000	BATTERY CASE	UM-1*3 (XMII SERIES)
12-2	1	A1600060400	RECHARGEABLE BATTERY	GP4-6 6V 4AH
13	1	Z0010000310	SCREW	M3*0.5P*10L
14	1	A0910111020	MINI-JUMPER	PITCH 2.54,6.5mm
15	1	G0011VGS000	Sealing Cover	VGS SERIES
16	1	G0030VGS000	Rubber sealing washer	VGS SERIES,FOR BATTERY
17	1	G0009VGS000	BATTERY COVER,	VGS SERIES,
18	4	Z0016001004	S/S SCREW	Ø3*16L
19	8	Z0015100410	S/S SCREW	M4*0.7P*10L
20	4	G0004MP0002	S/S ADJUSTABLE FEET	MS SERIES
21	1	F0005VGS100	S/S UNDER CABINET	GS SERIES
22	1	G0030GS0000	RUBBER SEALING TIE	GS SERIES
23	1	F0003GS0100	ALUMINUM L/C SUPPORT(UNDER)	GS-300
24	1	B0GS0000001	MEMBRANE KEYBOARD	GS SERIES,OIML CERTIFICATE
25	1	C1VGS03000X	OVERLAY PC	AGS/VGS SERIES
26	1	F0005GS0014	S/S UPPER CABINET	AGS/VGS-300 SERIES
27	1	A5005000090	BUBBLE LEVEL	D14 (Dia.14mm)
27	1	G0030000200	BUBBLE LEVEL HOLDER	50*16*10
28	4	Z0014000310	SCREW(HEX. HEAD)	M3*0.5P*10L
29	1	G0003JW0000	PLASTIC L/C SUPPORT(UPPER)	JW SERIES
30	1	A0044XXXXXX	LOADCELL	BCL SERIES
31	2	F0027GS0000	S/S WIND SHIELD COVER	GS-300 SERIES, §180*8
32	1	C0GS0000000	ARCRYLIC TUBE	§180*120*3mm
33	1	F0002GS0010	S/S PLATTER	GS-300(§149*8mm*0.3)
34	1	G0002JW0000	PLASTIC PLATTER	DB, NJW SERIES

AGS/VGS-1.2K~30K

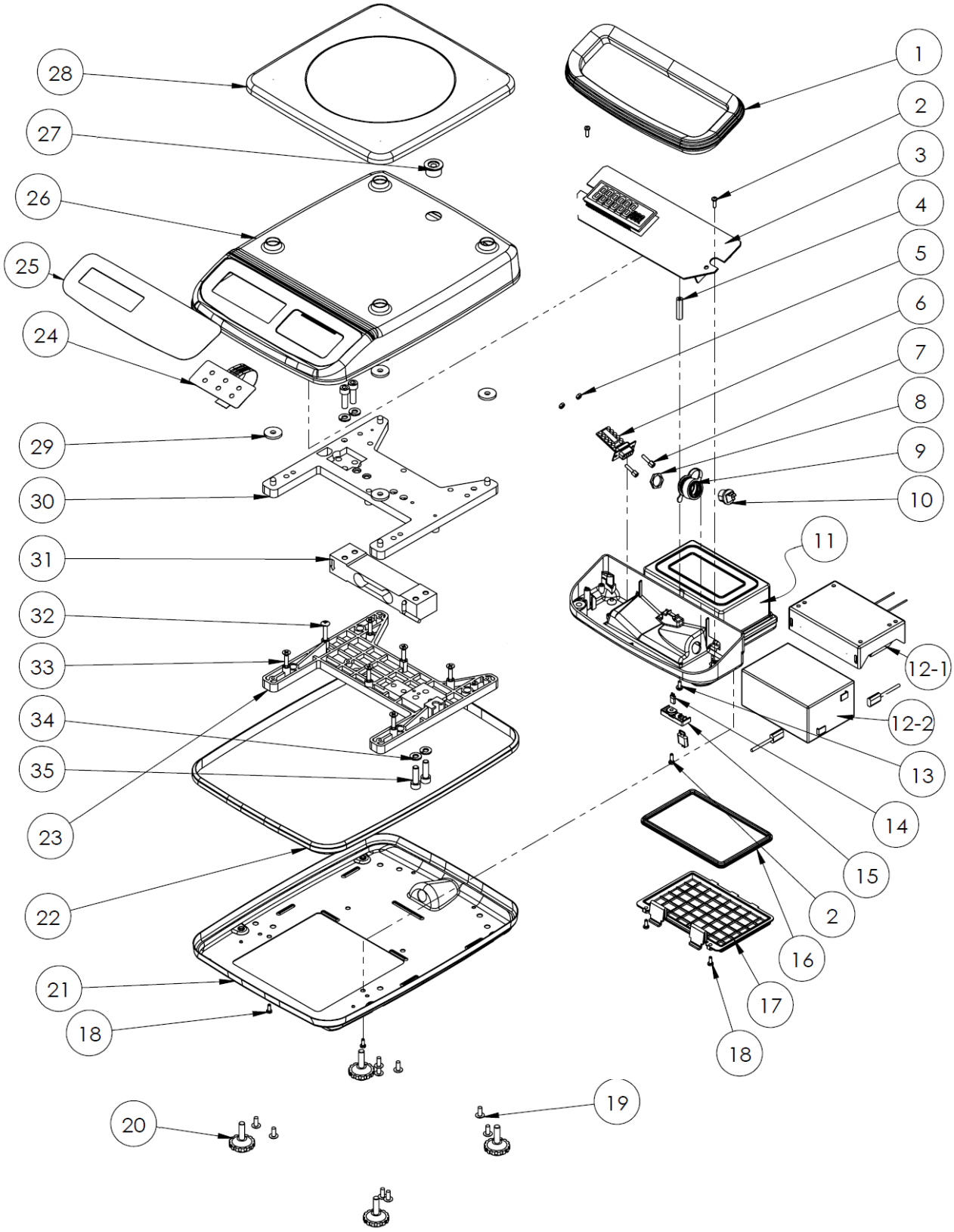

ITEM	QTY	PART NO.	PART NAME	DESCRIPTION
1	1	G0030VGS001	Rubber sealing washer	VGS SERIES,FOR PCB
2		Z001XXXXXXX	SCREW	Ø3*10L
3	1	E1VGS000010	P.C.B. KIT	GS-13-X
5	2	Z001XXXXXXX	NUT	3/8 *P0.6
6	1	E1DM0100000	P.C.B. KIT (RS232)	DM-70-1
7	2	Z001XXXXXXX	SCREW	3/8 *15L
8	1	Z0016100000	NUT	SCD-021
9	1	G0030FS0000	RUBBER PLUG	FS SERIES, FOR DC JACK
10	1	A0906000210	D.C. JACK	SCD-021 (BLACK)
11	1	G0030VGS100	Motherboard housing	VGS SERIES
12-1	1	G0007XM2000	BATTERY CASE	UM-1*3 (XMII SERIES)
12-2	1	A1600060400	RECHARGEABLE BATTERY	GP4-6 6V 4AH
13	1	Z0010000310	SCREW	M3*0.5P*10L
14	1	A0910111020	MINI-JUMPER	PITCH 2.54,6.5mm
15	1	G0011VGS000	Sealing Cover	VGS SERIES
16	1	G0030VGS000	Rubber sealing washer	VGS SERIES,FOR BATTERY
17	1	G0009VGS000	BATTERY COVER,	VGS SERIES,
18	4	Z0016001004	S/S SCREW	Ø3*16L
19	8	Z0015100410	S/S SCREW	M4*0.7P*10L
20	4	G0004MP0002	S/S ADJUSTABLE FEET	MS SERIES
21	1	F0005VGS100	S/S UNDER CABINET	GS SERIES
22	1	G0030GS0000	RUBBER SEALING TIE	GS SERIES
23	1	F0003GS0101	ALUMINUM L/C SUPPORT(UNDER)	GS SERIES(1KG ABOVE)
24	1	B0GS0000001	MEMBRANE KEYBOARD	GS SERIES,OIML CERTIFICATE
25	1	C1VGS03000X	OVERLAY PC	AGS/VGS SERIES
26	1	F0005GS0110	S/S UPPER CABINET	GS SERIES
27	1	A5005000090	BUBBLE LEVEL	D14 (Dia.14mm)
27	1	G0030000200	BUBBLE LEVEL HOLDER	50*16*10
28	1	F0002GS0000	S/S PLATTER	GS SERIES
29	4	G0004GSP000	RUBBER PAD	CFR-190603,GSP SERIES
30	1	F0003GS0102	ALUMINUM L/C SUPPORT(UPPER)	GS SERIES
31	1	A00XXXXXXXX	LOADCELL	PA06 OR 1022 SERIES
32	1	Z0015100420	S/S SCREW	M4*0.7P*20L
33	2(5)	Z0011100415	FLAT HEAD SCREW(NYLOK)	M4*0.7P*15L
34	4	Z0040001106	S/S SPRING WASHER	M6 OR 1/4”
35	4	Z0014000620	HEX. HEAD SCREW	M6*1P*20L

APPROVED NO.		REV.
DRAWING NO.: VGS-M-01-A		1
DWG. NAME	VGS/AGS SERIES SEALING DIAGRAM	

VGS/AGS SERIES SEALING DIAGRAM

SEALING POSITION

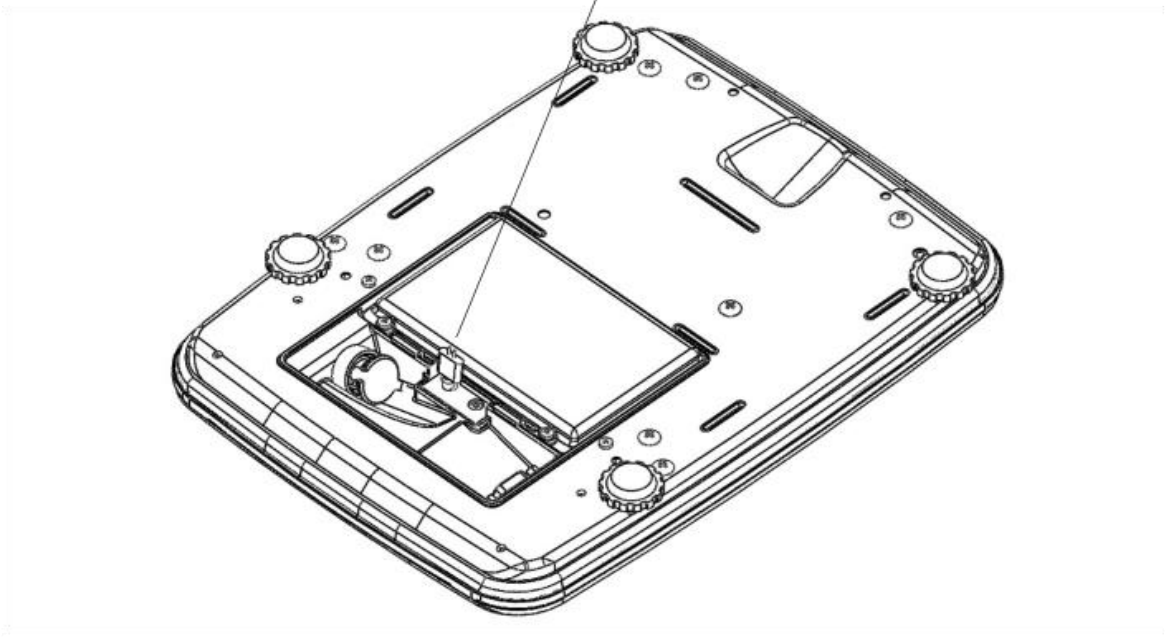

APPROVED NO.		REV.
DRAWING NO.: VGS-M-02-A		1
DWG. NAME	VGS/AGS SERIES ACESS CALIBRATION DIAGRAM	

VGS/AGS SERIES ACESS CALIBRATION STEPS AS BELOW

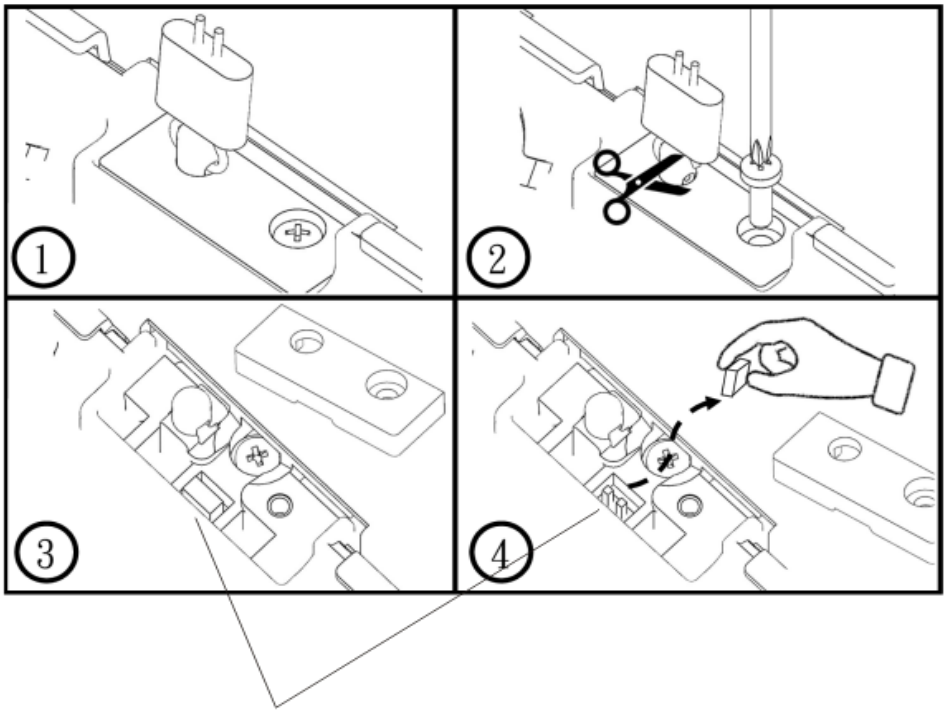

REMOVE THE CAL-LOCK JUMPER
TO ACESS CALIBRATION